QUICKIE®

Electric Power Unit for Wheelchairs

iXpress

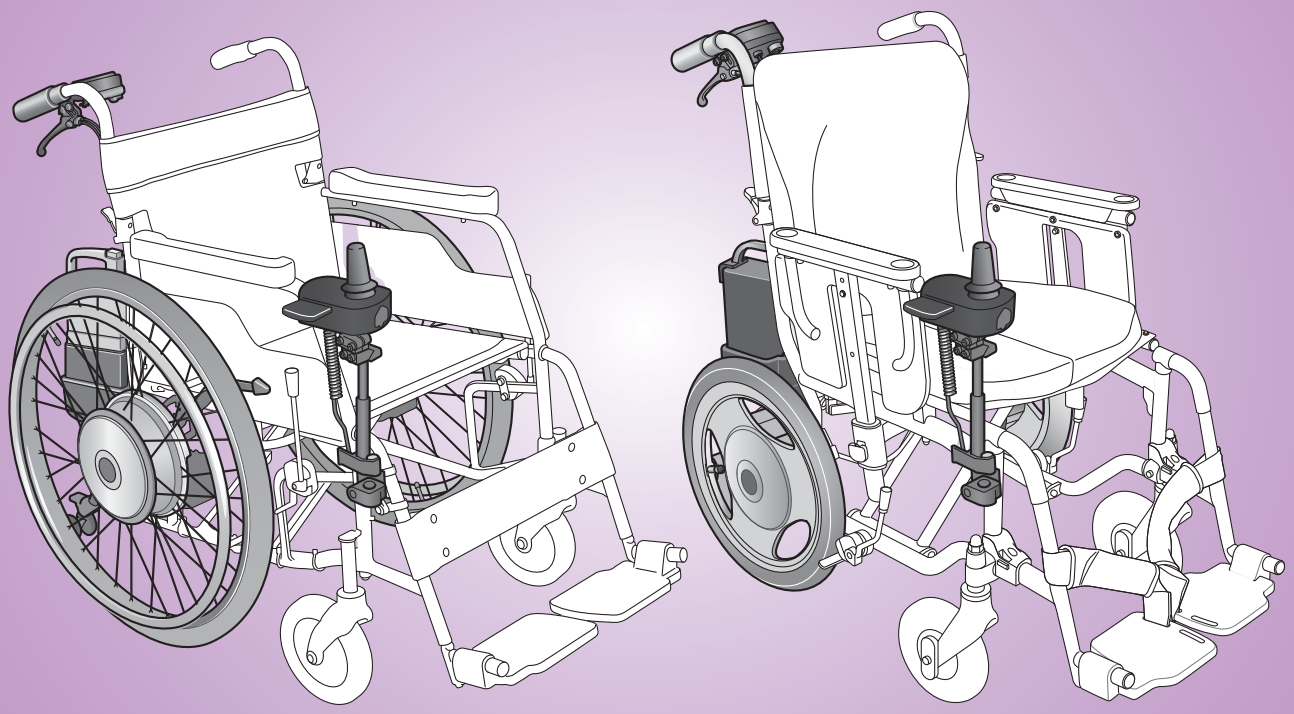

OWNER'S MANUAL

⚠ Read this manual before using the product.

Read this manual carefully to ensure safe and comfortable operation. After reading it, store it where it can be accessed easily for future reference.

Part# ST103

Table of Contents

1. Please read before use 1

1.1. Foreword 1
1.2. Symbols Used in This Manual 1
1.3. Operation Diagnosis Check 2
1.4. Assistive Operation Diagnosis Check 3
1.5. Warnings and Notes for the Operation 4
1.6. Warning Label Location Diagram 19

2. Names of Parts 21

2.1. JWX-2 21
2.2. Nickel Metal Hydride Battery (JWB2) 22
2.3. Lithium Ion Battery (ESB1) 23
2.4. Charger for Lithium Ion and Nickel Metal Hydride Battery (ESC3) 24

3. Before Sitting in the Wheelchair 25

3.1. Inspecting the Wheelchair 25
3.2. Checking Your Clothing 29
3.3. Checking the Residual Capacity of the Battery and Installing the Battery on the Wheelchair 29

4. Riding the Wheelchair 32

4.1. Sitting in the Wheelchair 32
4.2. Moving the Wheelchair 33
4.3. Checking the Residual Capacity of the Battery during Operation 34
4.4. Other Functions 34
4.5. Practicing Basic Operations 35

5. After You are Finished Riding the Wheelchair 38

5.1. Getting out of the Wheelchair 38

5.2. Removing the Battery 39

6. Handling the Batteries and Chargers 41

6.1. Types of Batteries 41

6.2. Maintenance 41

6.3. Warnings and Notes for Battery Handling 42

7. Nickel Metal Hydride Battery and Charger 46

7.1. Features of the Nickel Metal Hydride Battery (JWB2) 46

7.2. How to Use the Nickel Metal Hydride Battery (JWB2) 46

7.3. Characteristics and Handling of the Nickel Metal Hydride Battery (JWB2) 48

7.4. How to Charge the Nickel Metal Hydride Battery (JWB2) 50

7.5. Refresh Charging the Nickel Metal Hydride Battery (JWB2) 54

7.6. Charger (ESC3) Indicator Lamps 56

8. Lithium Ion Battery and Charger 58

8.1. Features of the Lithium Ion Battery (ESB1) 58

8.2. How to Use the Lithium Ion Battery (ESB1) 58

8.3. Characteristics and Handling of the Lithium Ion Battery (ESB1) 60

8.4. How to Charge the Lithium Ion Battery (ESB1) 63

8.5. The Temperature of the Lithium Ion Battery (ESB1) during Charging 67

8.6. Charger (ESC3) Indicator Lamps 68

9. Wheelchair Transporting and Storing Instructions 69

9.1. Loading the Wheelchair in a Car 69
9.2. Unloading the Wheelchair from a Car 71
9.3. Storing the Wheelchair 72
9.4. Boarding an Airplane 73

10. Wheelchair Disassembly and Adjustments 74

10.1. Removing and Installing the Unit 74
10.2. How to Remove Battery Bag of JWX-2 (Battery Separated Type) 77
10.3. Anti-tip device 80
10.4. Smart Tune Settings 83

11. Maintenance, Daily Check, Periodic Inspection 84

11.1. Maintenance 85
11.2. Daily Checks 86
11.3. End of JWX-2 Use Recycling 86

12. Dimensions and Specifications 87

12.1. Dimensions 87
12.2. Specifications 88

13. Troubleshooting, Repairs, Warranty 90

13.1. Before Requesting Repairs 90
13.2. Requesting Repairs and Inspections 93
13.3. Serial Number Location 93

14. Australian Warranty 94

14.1. Australian Warranty 94

Introduction

This is a manual for the “JWX-2” electric power assist unit for wheelchairs. Before you read this manual, check which product you are using. For information on the wheelchair frame to which JWX-2 is attached, see the owner’s manual from the frame manufacturer.
This product consists of the left and right drive units, battery and the battery charger. The drive units are already installed to the wheelchair frame. For the initial use, the customer does not have to use tools, and so on, to assemble the wheelchair. Refer to “2. Names of Parts” to ensure that these components are installed to the wheelchair that you purchased and that the battery and charger are included. If you visually notice that any of these components are not installed, are not included, or are damaged before using the wheelchair, immediately contact the dealer without using the wheelchair.

JWX-2

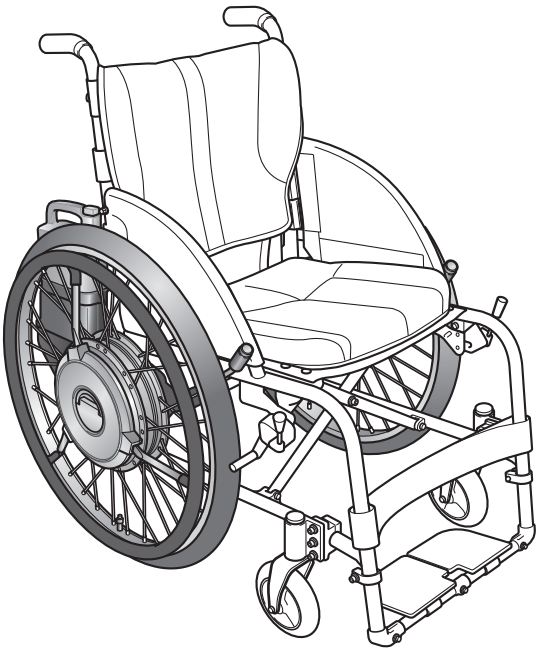

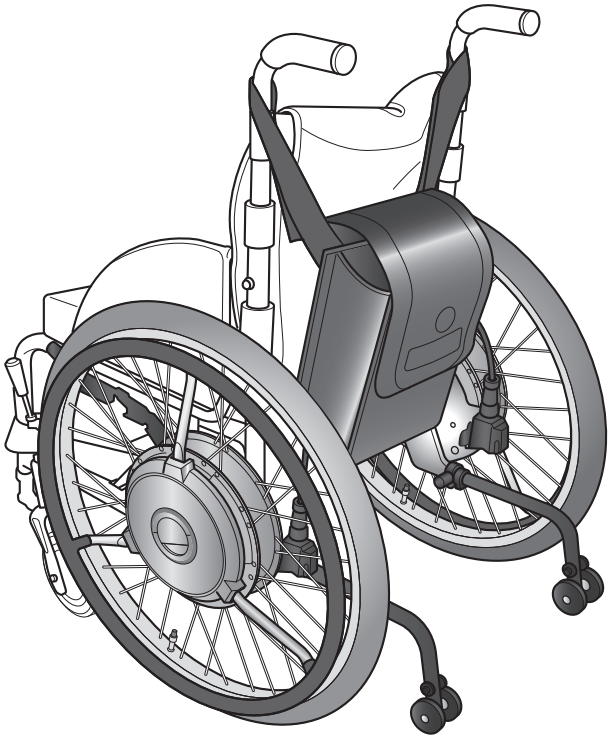

For information for operating the wheelchair frame and warranty for the frame with which you are using the JWX-2, see the frame manual.

WARNING

- **Read and understand this manual completely before operating your JWX-2 product. This manual should be considered a permanent part of your product and should remain with it.**

1. Please read before use

Caution: Federal law restricts this device to sale by or on the order of a practitioner licensed by the law of the State in which he/she practices.

1.1. Foreword

Thank you for purchasing the JWX-2.
Indication for use: The device JWX-2. is a Powered Wheelchair Conversion Kit and suitable for a disabled person who can't walk or has restrictions on walking. It is intended for medical purposes to provide a means for a disabled person to take over the propulsion of the wheelchair and increase mobility and flexibility.
Generally speaking, riding in a wheelchair incurs the possible risk of personal injury or damage to the wheelchair from improper use. Depending on the type or extent of the disabilities of the user, it might be dangerous to travel unaccompanied.
Before using the wheelchair, be sure that not only the user, but also the assistant and controller, has read this manual to assure full understanding.

(1) The wheelchairs on which the JWX-2 has been installed are wheelchairs for physically handicapped people, and legal status of someone in a wheelchair is that of a pedestrian. Make sure to adhere to the traffic rules and manners of a pedestrian.
(2) The JWX-2 withstands a load of 129 kg (285 lb). Use with a total maximum load included the chair frame weight of 129 kg (285 lb). If the frame on which the JWX-2 is installed has an even lighter load capacity, ensure that you do not exceed that value.
(3) To help ensure safe use, warning labels are affixed to this product. Make sure to adhere to the warning labels. Refer to "1.6. Warning Label Location Diagram" for the locations of the warning labels.
(4) Do not use this product for any purpose other than as an electric wheelchair.
(5) Some of the illustrations in this manual are images of general electric wheelchairs. The actual product may be different than that shown.

1.2. Symbols Used in This Manual

⚠	**This is the safety alert symbol. It is used to alert you to potential personal injury hazards. Obey all safety messages that follow this symbol to avoid possible injury or death.**
⚠ **WARNING**	**A WARNING indicates a hazardous situation which, if not avoided, could result in death or serious injury.**
NOTICE	**A NOTICE indicates special precautions that must be taken to avoid damage to the product or other property.**
⃠	**Indicates things you must not do.**
TIP	**A TIP provides key information to make procedures easier or clearer.**

1.3. Operation Diagnosis Check

Depending on the extent of your disabilities, it may be dangerous to travel unaccompanied. Use this diagnosis check as a guide to determine whether or not you can travel unaccompanied.

1

WARNING

- **Before using the wheelchair, be sure to assess your competence and determine whether or not you need an assistant.**
  Moreover, in determining the necessity of an assistant, consult expert opinions as a point of reference.
  If your judgment is based solely on your own opinion, you or other people around you may get injured.

Diagnosis Check

(1) Are you able to travel using the handrims?
(2) Are you able to correctly perceive visually the conditions of the road surface and your surroundings, and avoid dangerous areas?

Can operate both.

Have trouble operating one or both.

Power assist use is dangerous.
Do not use JWX-2.

Diagnosis Check

(1) Are you able to operate the switches and parking brakes?
(2) Are you able to get in and out of the wheelchair, and to replace the battery?

Can operate both.

Have trouble operating one or both.

Have an assistant accompany you.

You can travel unaccompanied. For your safety, remember to travel carefully.
In situations such as those mentioned in the warnings in 1.5. Warnings and Notes for the Operation, be sure to have an assistant accompany you, and pay sufficient attention to safety while traveling.

1.4. Assistive Operation Diagnosis Check

Use the diagnosis check below as a guide to determine whether or not you can provide assistive operation.

WARNING

- **If an assistant is to accompany you and operate the wheelchair, be sure to assess his or her competence.**
  Moreover, when assessing the assistant's competence, consult expert opinions as a point of reference.
  If your judgment is based solely on your own opinion, you or other people around you may get injured.

- **If you lack the competence to provide assistive operation, do not attempt to provide it.**

Diagnosis Check

If you feel uncomfortable with any of the 3 tasks below, do not provide assistive operation.

(1) Are you able to correctly perceive the conditions of the road surface and your surroundings, and avoid dangerous areas?
(2) Are you able to assist the user to get on and off the wheelchair, and to replace the battery?
(3) Are you able to provide assistive operation on a manual wheelchair?

1.5. Warnings and Notes for the Operation

Read this manual before using the product.
Read this manual carefully to ensure safe and comfortable operation. After reading it, store it where it can be accessed easily for future reference.
Unless specifically noted, the following information applies to when the user is operating the wheelchair themselves and when an assistant is operating the wheelchair using the assistant operations.

1

1.5.1. Before Using the Wheelchair after Purchasing the Unit

WARNING

- **Before using the wheelchair, be sure to assess your competence and determine whether or not you need an assistant.**
  Moreover, in determining the necessity of an assistant, consult expert opinions as a point of reference.
  If your judgment is based solely on your own opinion, you or other people around you may get injured.

- **Practice traveling on a level and safe area with an assistant accompanying you, until you are comfortable with the operation. If you go on public roads while still unfamiliar with the operation, you or other people around you may get injured.**

1.5.2. Before Use Each Day

WARNING

- **Perform the daily checks before use each day. Make a habit out of inspecting the wheelchair. Continued use of the wheelchair with a problem in the wheelchair body or the wheels may cause damage to the wheelchair while traveling, and may result in a rollover or fall.**

- **Before using the wheelchair each day, ensure that there is air in the tires. Always keep the air pressure in the rear tires at a normal level. If the air pressure in the rear tires decreases, the parking brakes may become ineffective.**

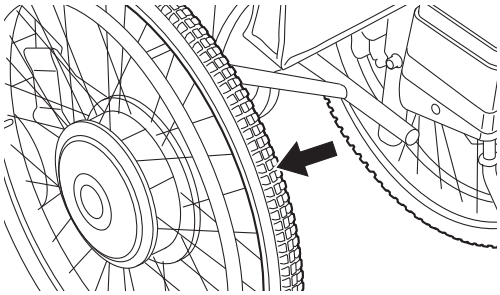

WARNING

- **Before using the wheelchair each day, ensure that the anti-tip devices are in the correct position. If the anti-tip devices are not in the correct position, the wheelchair could fall backward.**

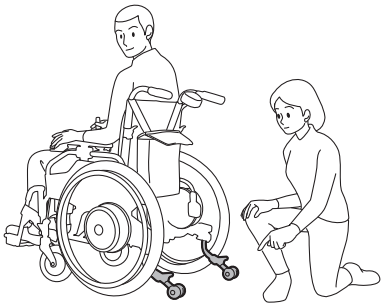

- **Before using the wheelchair each day, check the residual capacity of the battery. If the residual capacity of the battery is low, the battery may run out during operation and it may become impossible to travel in power drive mode.**

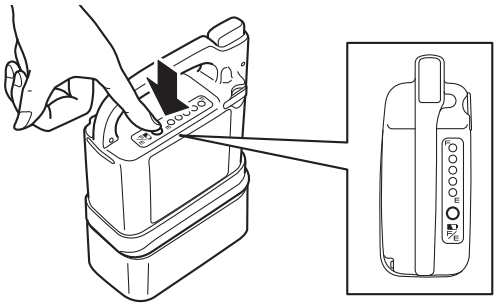

1.5.3. Handling the Wheelchair

WARNING

- **Modifying the unit or its mounting may adversely affect its performance and safety. Never make any modifications.**
- **If the wheelchair has parts that are foldable or detachable, do not operate the wheelchair with those parts folded or removed.**
- **When lifting the wheelchair, do not hold movable parts.**
- **Do not operate with any heavy baggage hanging over the backrest, or with any heavy objects in the compartment. The wheelchair could easily fall backward on an inclined slope, and may cause you or other people around you to get injured.**

- **The wheelchair may tip over if it is operated with the anti-tip bar removed, folded, or with the safety wheels facing upwards. Be sure to set the anti-tip bar correctly and operate the wheelchair with the safety wheels in the correct position.**
- **Do not connect any electric instruments to the battery seat plug. This plug is to connect PC for the Smart Tune software. Plugging other electric instruments like audio microphone or earphones may cause unit trouble.**
  About the Smart Tune software, refer to section 10.
- **Removing the battery while traveling causes the brakes to be applied to the rear tires, and may cause you or other people around you to get injured.**

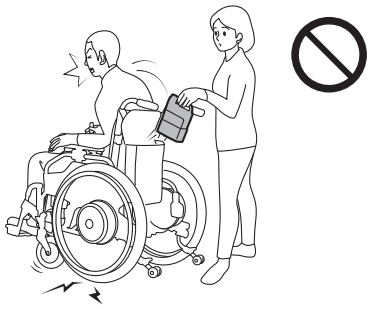

- **While the wheelchair is being operated or after operation, do not touch the back of the drive units. During or after operation, the back of the drive units may be hot. In addition, if the wheelchair is near a source of heat, the drive units may become hot.**

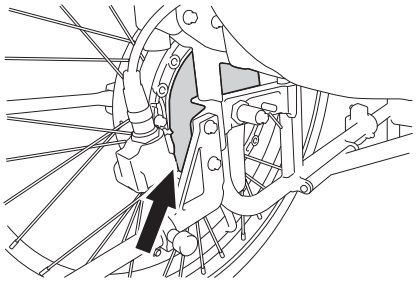

Back of the unit
(Both side)

WARNING

- **While operating the wheelchair, be careful not to get your hands tangled in the wheel spokes, wheel holes, etc.**

1

1.5.4. Getting In/Out of the Wheelchair, Seating

WARNING

- **When getting in the wheelchair by yourself or when the assistant has the user of the wheelchair get in the wheelchair, ensure that the wheelchair is on a level ground. If the user attempts to get in the wheelchair on an incline, he or she may lose balance and fall off the wheelchair.**

- **To switch the clutch levers to the manual position, such as when starting assistant operations, apply the parking brakes on a level and stable ground, and then with the power turned off, switch the clutch levers.**
- **If you are using a wheelchair with no parking brakes, have the assistant hold the wheelchair to ensure that it does not move. Failure to observe the above may cause the wheelchair to start moving unexpectedly, and may result in you or other people around you to get injured.**
- **Do not lean out of the wheelchair to retrieve an item. Otherwise, you could fall off the wheelchair or the wheelchair could tip over.**

1.5.5. General Operation

WARNING

- **Never ride the wheelchair with two people.**
  The wheelchair may malfunction or the people riding it may get injured.

- **Never operate the wheelchair after consuming alcohol or taking medicine that causes drowsiness.**
- **Never operate the wheelchair while holding an umbrella or other items.**
- **Never tow the wheelchair. Do not use the wheelchair to tow or pull anything.**
- **If you want to use a portable phone, etc., stop the wheelchair at a safe place and turn off the wheelchair. Moreover, while traveling in power drive, keep portable telephones and other electronic devices turned off. Otherwise, there is a risk of an accident.**

- **Do not operate the wheelchair near a device that produces strong radio waves. If the wheelchair is near a source of radio waves and starts to operate abnormally, immediately turn off the power, and quickly move away from that location using the assistant operations or manual operation.**

  The weak electromagnetic waves emitted by the JWX-2 may affect other electronic devices, such as automatic doors and the anti-theft systems of stores. In this case, turn off the power and operate the wheelchair using the assistant operations or manual operation.

WARNING

- **Do not turn the power switch off while traveling.**
  It causes the brakes to be applied to the rear wheels in some cases and may cause you to fall down from the wheelchair.

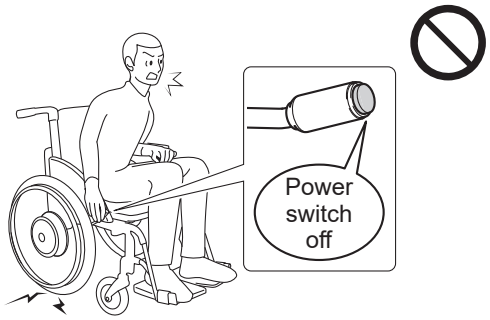

- **Do not use the wheelchair for transporting luggage or for any other purpose than to provide assistance to a disabled person.**

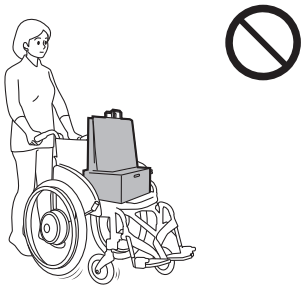

- **Do not ride with clothing that is unsafe for wheelchairs, such as shown below. If you drive with such clothing, you or other people around you may get injured.**

Long scarves

Clothing with loose sleeves

Pants/skirts with wide hems

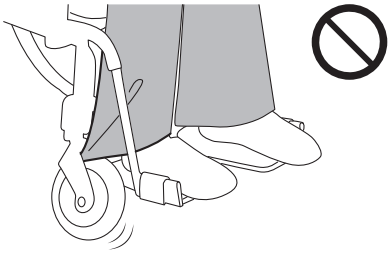

Bare feet, sandals, slippers, ill-fitting footwear, etc.

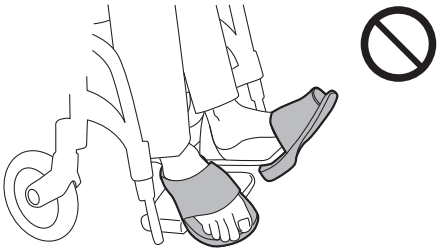

In the following environments and situations, you may need an assistant to accompany you and to operate the wheelchair for you.
In such cases, have an assistant accompany you. Traveling alone in these situations may lead to injury.
Moreover, check to see if any dangers such as those shown below exist in the roads you use on a daily basis. If so, select a route that does not pass through such areas.
Always check the surrounding conditions to ensure safety.

1.5.6. Operation on Public Roads

WARNING

- **When the wheelchair is operated outdoors, its legal status is that of a pedestrian. Make sure to adhere to the rules and manners of a pedestrian.**
- **On general roads, be careful of automobiles, bicycles, and pedestrians. In particular, pay the utmost attention to pedestrians.**

- **Although the wheelchair can be operated on pedestrian-only roads, it cannot be operated where pedestrians are not allowed (car roads, in the middle of a road, etc.).**

- **If the road has a sidewalk, operate the wheelchair on the sidewalk.**
- **If the road does not have a sidewalk, operate the wheelchair on the side strip of the road where pedestrians walk.**
- **If the road does not have a side strip, operate the wheelchair on the side of the road where pedestrians walk.**

- **If two or more wheelchairs are traveling together outdoors, the wheelchairs should be operated in a single line with sufficient space between the wheelchairs. The wheelchairs should not be operated side by side.**

- **When starting off or moving backward, be careful of other people and obstacles around you.**

- **It is extremely dangerous to travel on a narrow street without a sidewalk. Choose a safer path whenever possible.**

- **Be careful not to travel too close to the edge when traveling on an embankment, etc., of a road. Depending on the condition of the shoulder of the road, you could accidentally move off the road.**

- **When traveling on a sidewalk that does not have a guardrail, there is a risk of falling into the street side. Have an assistant accompany you instead of traveling alone.**

WARNING

- **When traveling near a ditch, the tire may fall into it if there is a gap even if it is covered. Have an assistant accompany you instead of traveling alone.**
- **If there are any obstacles, stop the wheelchair and check in front of you and behind you for safety before proceeding.**
- **If an oncoming vehicle is near, stop the wheelchair, wait for the vehicle to pass, and then check in front of you and behind you for safety before proceeding.**
- **Do not operate the wheelchair outdoors at night. Not being able to see the road conditions, you may lose balance and fall, or people or cars may collide into you if they cannot recognize you.**

- **If it is raining or snowing, do not operate the wheelchair outdoors. Automobiles and other vehicles may collide into you if they cannot recognize you. If it starts to rain or snow while you are outdoors, move indoors as soon as possible.**

1.5.7. Operation on Slopes

WARNING

The wheelchairs equipped with the JWX-2 are built to be lighter compared to other heavier electric wheelchairs that use a general lead battery. For this reason, when a person sits in it, the overall center of gravity shifts higher. Therefore, caution is necessary when traveling on a slope.

- **Do not use the wheelchair on a slope steeper than 6 degree (10% grade). It may tip over or the brake may become ineffective.**

- **When going up/down a particular slope for the first time, have an assistant accompany you to ensure safety.**

WARNING

- **Do not operate the power switch on a slope.**
  The wheelchair behaves as a normal wheelchair while switched off. It may start to move.
  Park on a level place and apply the parking brake when you operate the power switch.

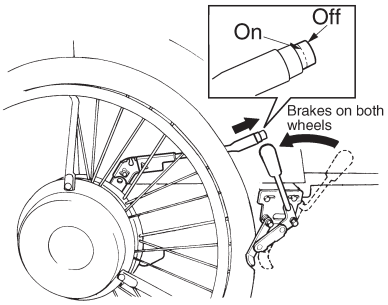

- **Do not abruptly turn on a downhill slope. In addition, do not traverse horizontally or diagonally across a steep slope. You could easily lose balance and tip over.**
- **On a downhill slope, start the braking operation early. The braking distance on a downhill slope may be significantly longer than when traveling on level ground.**

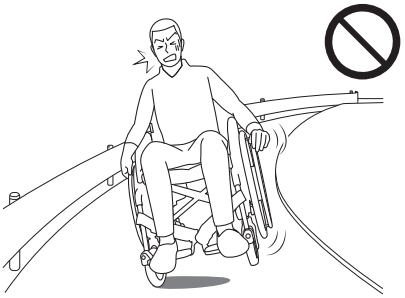

- **In the areas where the wheelchair leans sharply to the left or right, the wheelchair may tip over sideway. Have an assistant accompany you.**

- **When descending down a slope with the assistant operations, descend in reverse. If the assistant moves the wheelchair forward when descending, the passenger may plunge forward and fall off the wheelchair.**

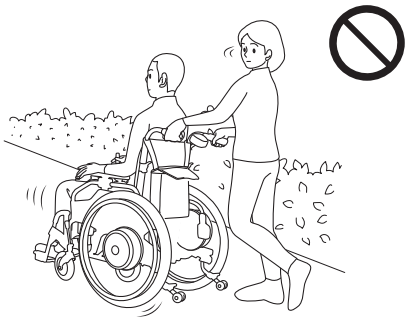

1.5.8. Going Up/Down Curbs

WARNING

The wheelchairs equipped with the JWX-2 are built to be lighter compared to other electric wheelchairs that use a heavier general lead battery. For this reason, when a person sits in it, the overall center of gravity may be different. Therefore, use caution when traveling on a curb.

- **When traveling in power drive mode, the wheelchair can clear level differences of approximately 25 mm (1 inch) (varies depending on the caster size). Any greater level differences should be cleared by an assistant by manual push operation.**
- **When going up/down a curb for the first time, have an assistant accompany you instead of traveling alone.**
- **When traveling over a curb, be careful not to lose your balance.**
- **When traveling over a curb, proceed at a right angle to the curb. Do not traverse the curb diagonally.**
- **Because the front casters are small, they are able to travel over only small curbs. Therefore, caution is necessary when traveling over curbs in power drive mode.**
- **When traveling between a sidewalk and a road, be careful of curbs.**
- **When descending from a curb with the assistant operations, descend in reverse. If the assistant moves the wheelchair forward when descending, the passenger may plunge forward and fall off the wheelchair.**
- **When going up/down a curb with the assistant operations, the safety wheels of the anti-tip bar may be raised or folded temporarily depending on the height of the curb. After traveling over the curb, be sure to place the safety wheels of the anti-tip bar in the correct position before operating the wheelchair.**

1.5.9. Crossing Roads

WARNING

- **You cannot cross a road where pedestrians are prohibited from crossing.**
- **When crossing at an unfamiliar location, have an assistant accompany you.**
- **If the residual capacity of the battery is low, the wheelchair may stall while crossing a street. Check the residual capacity of the battery before crossing.**

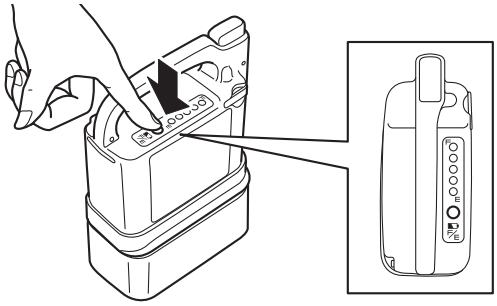

- **Before crossing a road, be sure to check to the left and right for safety.**
- **Do not cross a road if it is dangerous to do so, such as if an automobile is approaching.**
- **When crossing a road, proceed as close as possible at a right angle to the road. Do not cross the road diagonally.**
- **Cross a road at a location where there is a traffic light or crosswalk.**
- **When crossing a street at a crosswalk with no traffic light, pay sufficient attention to the traffic.**
- **If there is a pedestrian signal light, obey the signal light. If the signal light is flashing green or is red, you must not start to cross the road.**
- **If the street is wide, the signal may change before you finish crossing. In such places, wait for the next green light to give yourself enough time to cross the street.**
- **At intersections where there are no traffic lights or crosswalks, stop in the following three stages.**
  1. Stop before entering the road.
  2. Stop where you can be seen by automobiles.
  3. Stop where you have a good view of the road.

1.5.10. Railroad Crossings

WARNING

- **Avoid railroad crossings if you can go around them.**
- **If you have no choice but to travel over a railroad crossing, have an assistant accompany you.**
- **Be sure to stop before the railroad crossing and check to the left and right for safety.**
- **When traveling over a railroad crossing, proceed as close as possible at a right angle to the railroad tracks. If you travel diagonally, the wheelchair casters may get caught in the railroad tracks.**

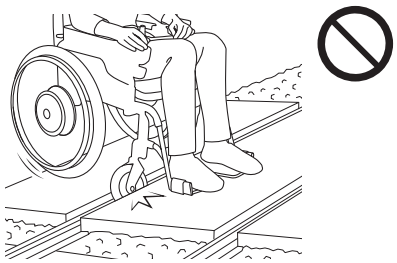

- **Be careful not to travel too close to the edge when traveling over a railroad crossing. Otherwise, the wheels could accidentally move off the railroad crossing.**
  If case of an emergency, do not panic. Have the assistant or a person around you push the emergency button and move off the railroad crossing as quickly as possible.

1.5.11. Poor Road Conditions

WARNING

The wheelchairs equipped with the JWX-2 or the are built to be lighter compared to other electric wheelchairs that use a general lead battery. For this reason, when a person sits in it, the overall center of gravity shifts higher. Therefore, caution is necessary when traveling on a curb.

- **Do not travel on gravel roads, bumpy roads, muddy roads, footpaths, etc. If you have no choice but to travel on such roads, have an assistant accompany you.**

WARNING

- **Do not drive the wheelchair on a frozen surface. You may not be able to stop the wheelchair.**

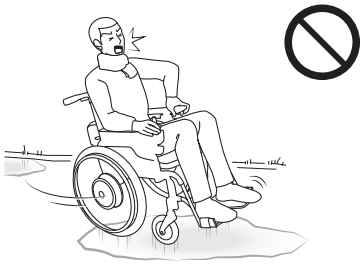

- **Go around locations where snow or water has accumulated or have an assistant accompany you. In such places where you do not know the road conditions or if the wheelchair slips, you could lose control or the brakes may become ineffective. If the wheelchair travels through a deep puddle and water enters the drive units, the wheelchair could stop.**

- **If you see a dip in the road, or if a sidewalk dips due to a car ramp, go around it. If you go straight into it, the wheelchair may tip over. If you have no choice but to keep going, do so with an assistant accompanying you to ensure safety.**

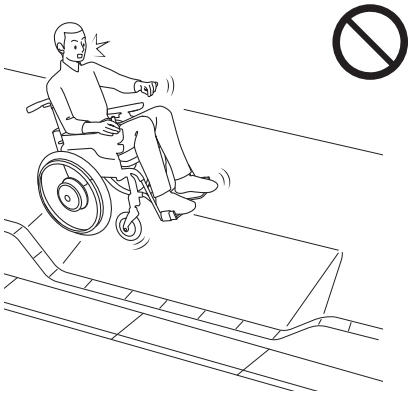

1.5.12. Parking Lots

WARNING

- **Do not travel directly behind or in front of automobiles in parking lots. Drivers may not be able to see you if you are directly behind or in front of their automobiles.**
- **Do not travel between automobiles in parking lots. Otherwise, you could damage the automobiles or be crushed when an automobile starts moving.**

1.5.13. Using Public and Private Transportation

WARNING

- **When using public transportation, check to ensure that wheelchair use is allowed beforehand. In addition, follow the rules and instructions when boarding the vehicle.**

- **When using a private automobile, do not use the wheelchair as a seat. Sit in one of the automobile's seats.**
- **When getting on/off a lift vehicle, always have an assistant accompany you to ensure safety.**

- **When using a train station, always have an assistant accompany you, stop the wheelchair on the train station platform so that it is parallel to the railroad tracks, and be sure to apply the parking brakes. Some train station platforms are positioned at a slight angle to the railroad tracks. In some cases, you could fall onto the tracks and be injured.**

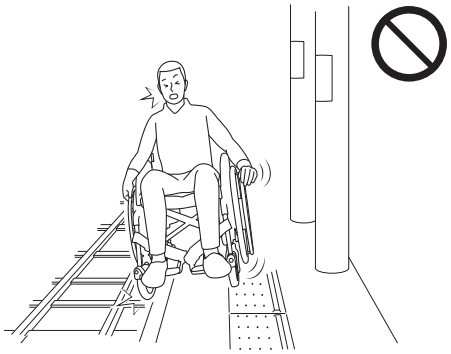

- **When getting on/off a bus or train, always have an assistant accompany you to ensure safety.**

- **Whenever you get off a bus, a taxi, or a train, be sure that the safety wheels on the anti-tip bar are in the correct position before getting in the wheelchair.**

1.5.14. Crowded Areas

WARNING

- **When getting in the wheelchair in a crowded area, do so with sufficient attention to your surroundings. If you bump into people or objects, your body may plunge forward, or people around you may get injured.**

- **When you are stopped in a crowded area, be sure to turn off the power and apply parking brakes. If a person in your surrounding area hits the handrim with his or her hand or arm, the wheelchair may start moving unexpectedly, causing injury to people around you.**

1.5.15. Transporting and Storing the Wheelchair

WARNING

- **When lifting a wheelchair with tilt-up arm support, never lift it by the arm support. Otherwise, the arm support may come off and cause an injury or damage to the equipment.**
- **When lifting a wheelchair, never lift it by the battery, cable, or controller. Otherwise, any of these devices may come off and cause an injury or damage to the equipment.**
- **Do not turn the wheelchair upside down. Doing so may cause parts of the wheelchair to fall off, resulting in an injury or damage to the equipment.**
- **During transport, do not place the battery or the wheelchair in a place that can become hot, or in direct sunlight.**
  This could lead to malfunction, or could cause the deterioration of the battery to progress rapidly.
- **Be sure to remove the battery when not in use, so that its power will not turn on unexpectedly in storage or during transport.**
- **Be sure to store the disconnected battery with the protective cap on it. Exposed contacts can cause short circuits and lead to a fire or battery rupture.**

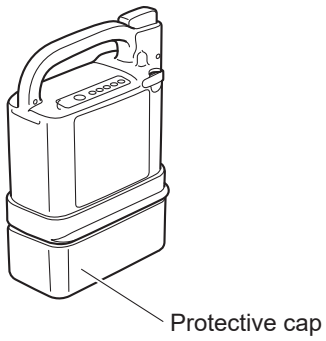

- **Do not store in places that can get wet by rain, or that are high in humidity.**
- **Do not store when it has been wet for a long time, or there is dirt on it. This can cause malfunction.**
- **Avoid storing in direct sunlight or in places where the temperature can get high.**
- **Do not wash by directly hosing it down with water. Also, do not wash with using steam. The electronic devices can get damaged, which may lead to malfunction.**
- **Do not clean with solvents such as gasoline or paint thinner. This may damage the painting and plastic parts.**

1.5.16. Assistant Operations in an Emergency

WARNING

- **During assistant operations in case of an emergency, turn off the power and move the wheelchair to a safe location.**

1.6. Warning Label Location Diagram

- **Power Unit**

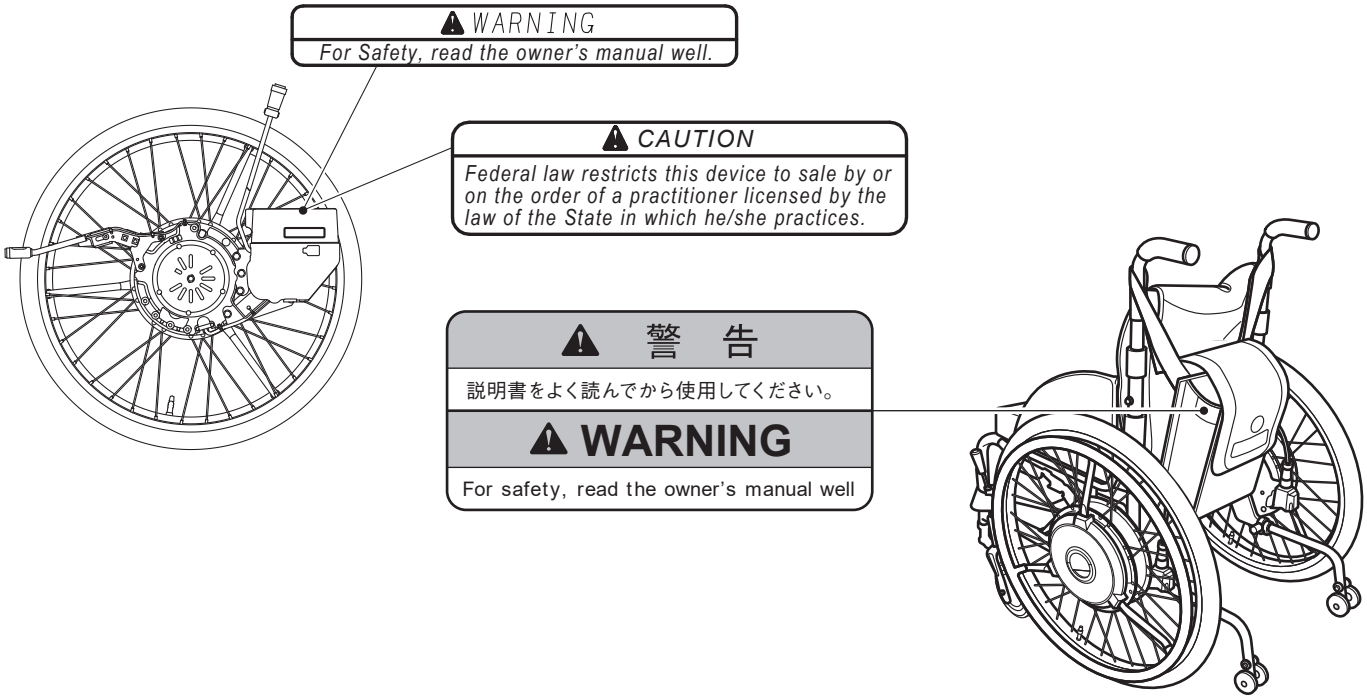

- **Lithium Ion Battery**

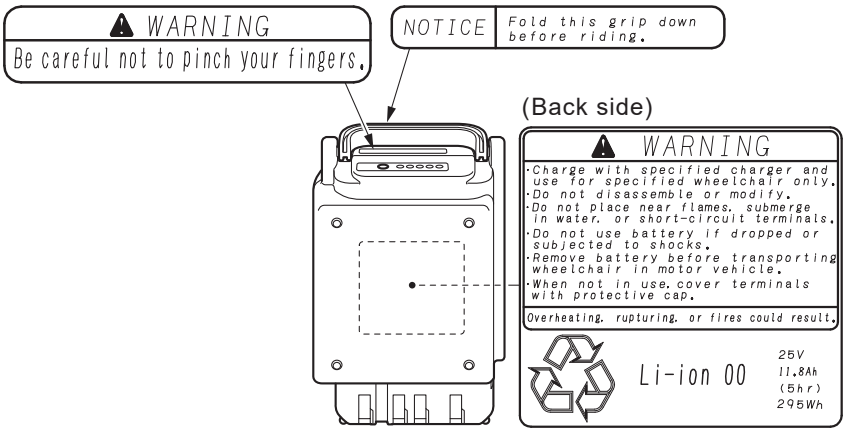

- **Nickel Metal Hydride Battery**

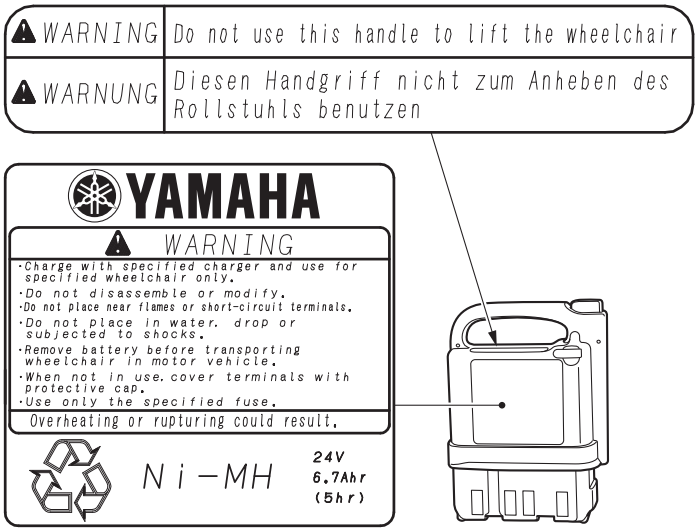

- **Ni-MH and Li-ion combined Charger**

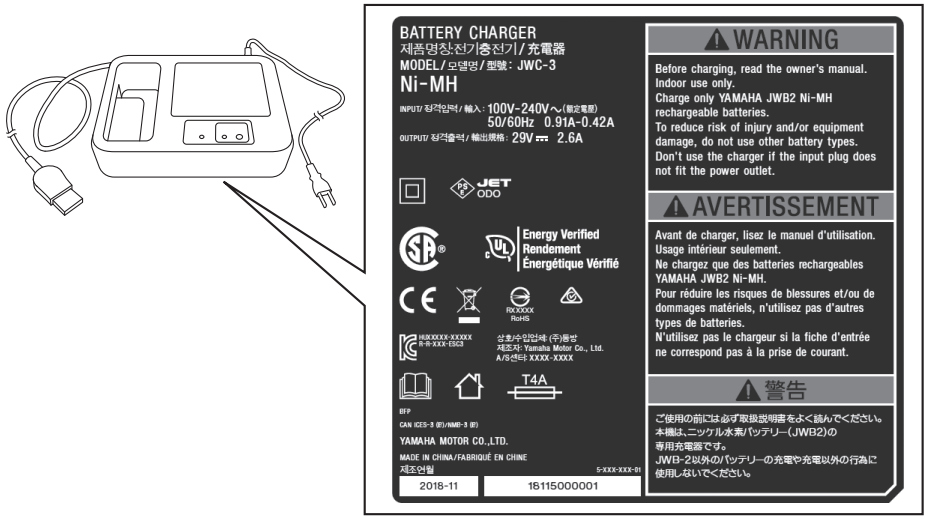

2. Names of Parts

2.1. JWX-2

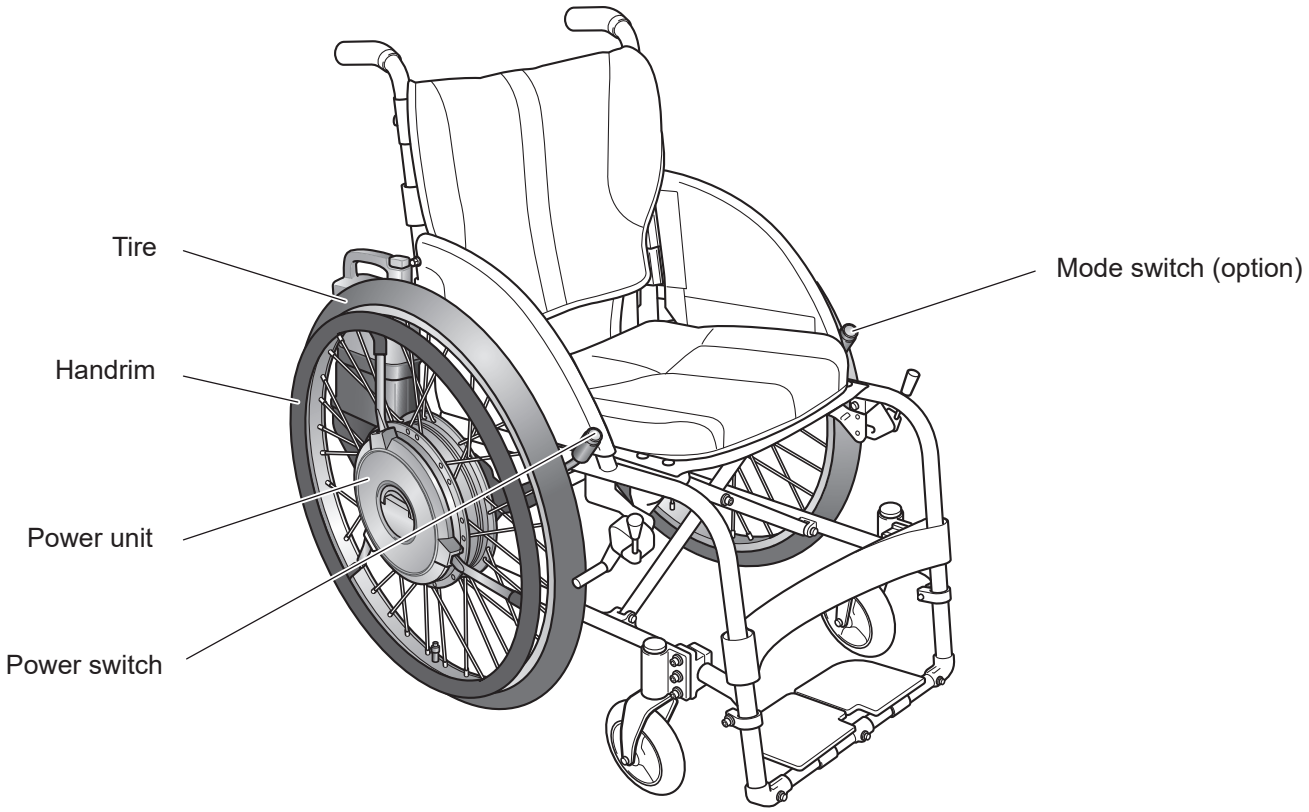

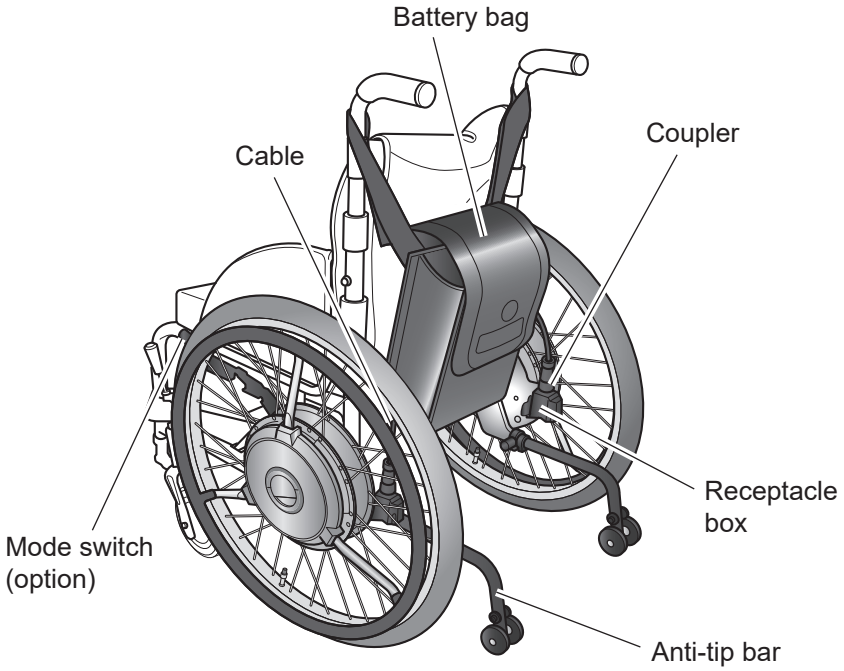

Either a nickel hydride battery set or a lithium ion battery set is supplied.

2.2. Nickel Metal Hydride Battery (JWB2)

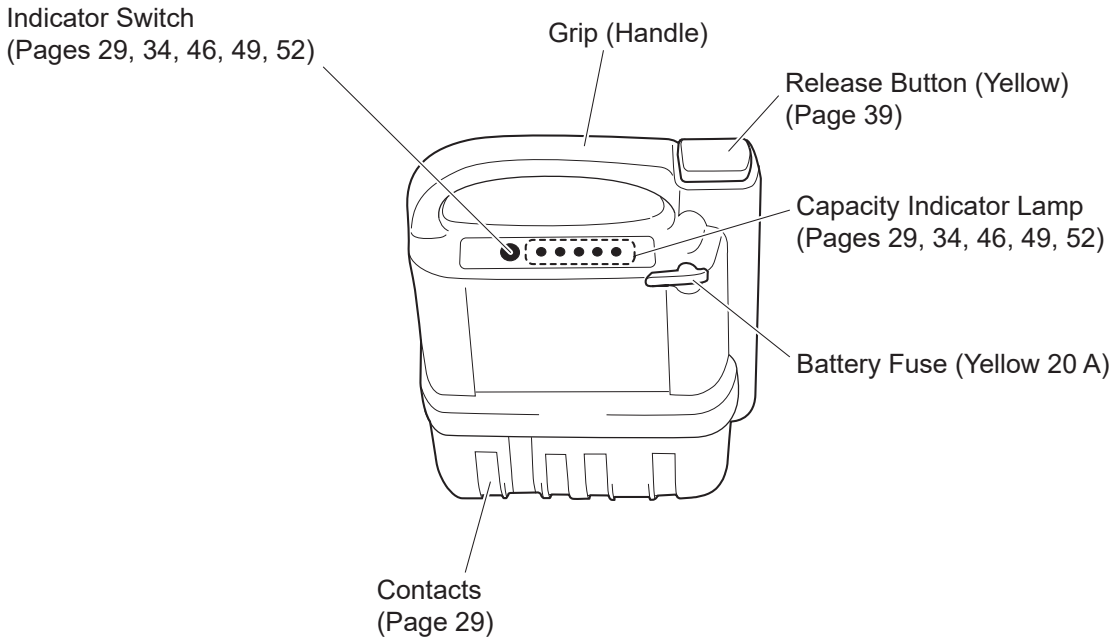

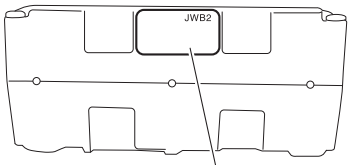

A code indicating the model (JWB2)
and the manufactured lot is printed.

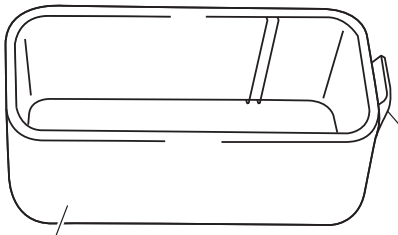

Spare Battery Fuse
(Yellow 20 A)

Protective cap

NOTICE

- **If the battery fuse blows, instead of replacing it by yourself, consult with your dealer. If you replace the fuse without eliminating what caused it to blow, the fuse may blow again, or the main unit may malfunction.**

2.3. Lithium Ion Battery (ESB1)

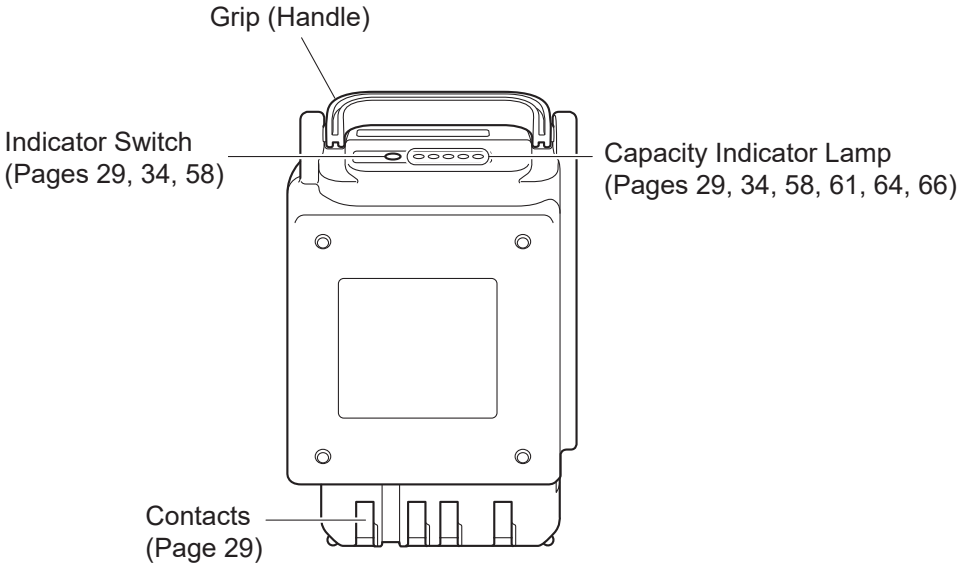

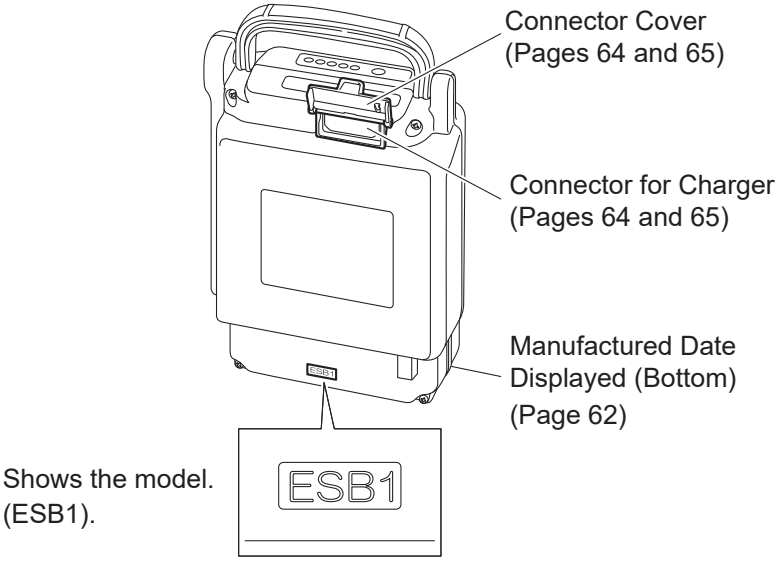

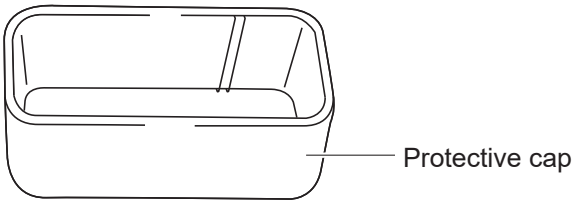

2.4. Charger for Lithium Ion and Nickel Metal Hydride Battery (ESC3)

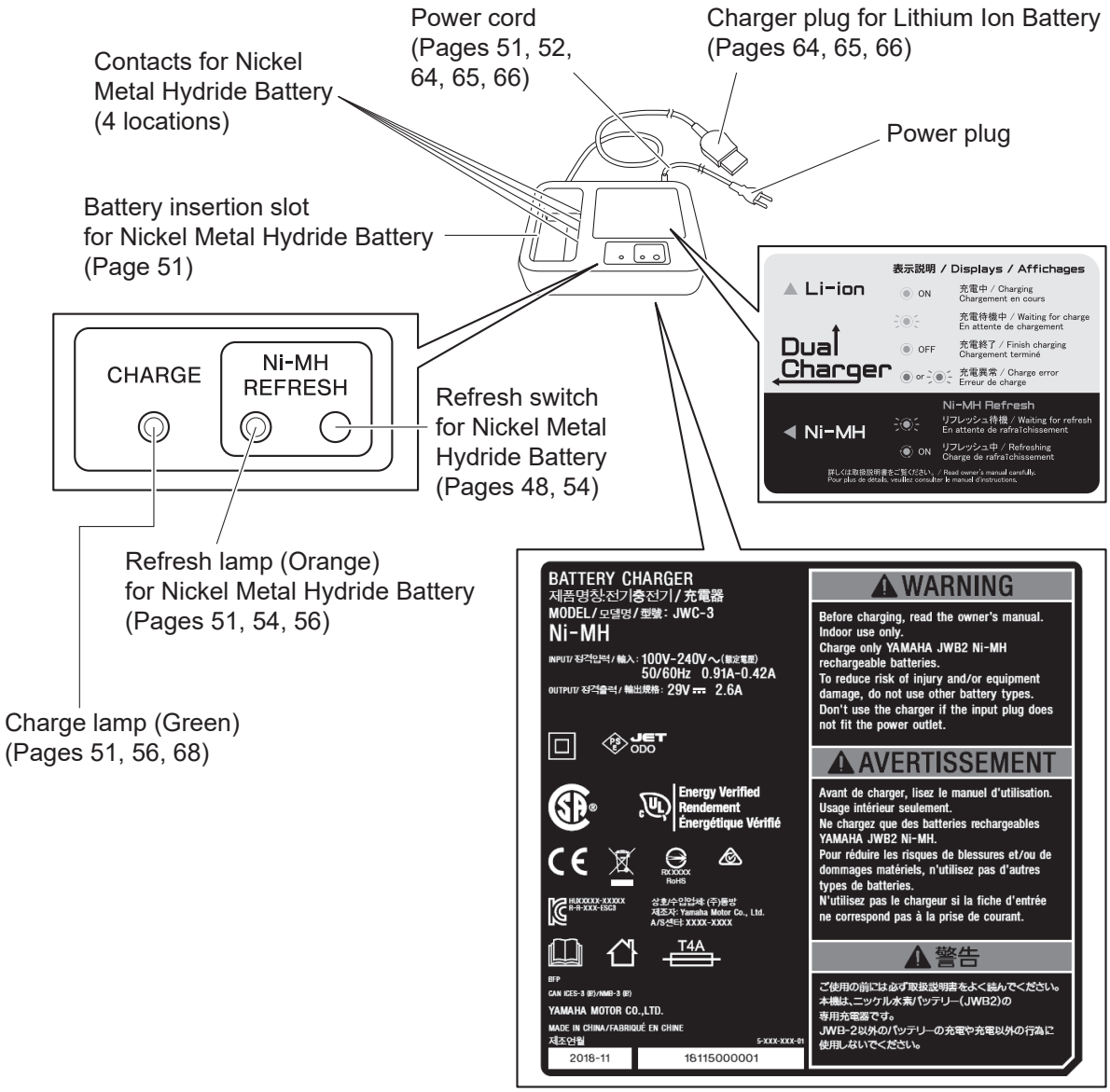

The label on the reverse side shows the model.

3. Before Sitting in the Wheelchair

3.1. Inspecting the Wheelchair

Inspect your wheelchair each time you use it to make sure the wheelchair is in safe operating condition. Always follow the inspection and maintenance procedures and schedules described in the Owner's Manual (see Chapter 11). If you detect any problem, contact your dealership.

(1) Anti-tip device

Check the anti-tip device which is installed to your wheelchair frame to ensure that it is not deformed or greatly damaged.
Check the safety wheels of the anti-tip device to ensure that they are in the correct position for operation.

Check that the safety wheels on the ends of the anti-tip devices are 35-50 mm (1.4-2.0 inches) above the ground when the casters and rear wheels are in contact with the ground.
If the distance between the safety wheels and the ground is not within this range, contact your dealership.

Check that the distance between the center of the wheelchair back pipe (where the axles of the rear wheels are installed) and the center of the safety wheels on the ends of the anti-tip devices is 245 mm (9.7 inches) or more. If the distance is less than 245 mm (9.7 inches), contact your dealership.

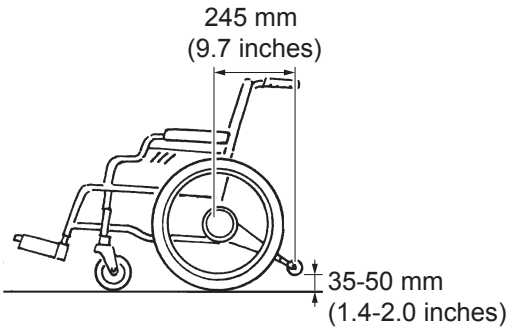

WARNING

- **The wheelchair may tip over if operated when the anti-tip device is removed or the safety wheels are not in the correct position. Do not operate the wheelchair when the safety wheels are not in the correct position. Only have the safety wheels folded or facing upwards when going over bumps with the assistant operations and other such situations.**
- **Continuing to use the wheelchair with a problem in the wheelchair body or the wheels may cause sudden damage to the wheelchair while traveling, and may result in a rollover or fall.**

(2) Rear tire

Check to ensure that there is tire depth.
Check the surface of the tire to ensure that there are no cracks in it.
Check to ensure that there is air in the tire. (Check by pressing the tire with your finger.)
If not enough, pump up (air pressure: refer to specification).

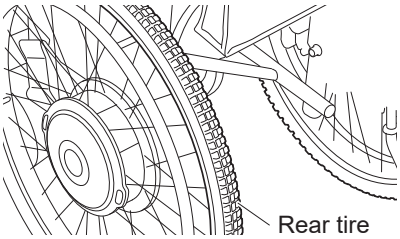

(3) Parking brakes

Check to make sure that the parking brakes are applied.
Push the wheelchair with the brakes applied on both wheels to ensure that the tires do not move.
Check the parking brakes to ensure that they do not wobble.

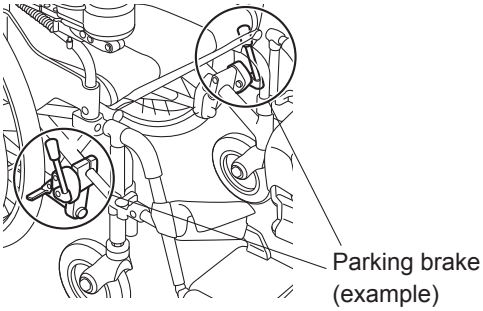

3

(4) Wheels

Check the wheels to ensure that they are not deformed or damaged.
Check the area where the wheel meets the frame to ensure that it does not wobble.
Check the spokes to ensure that they are not broken.

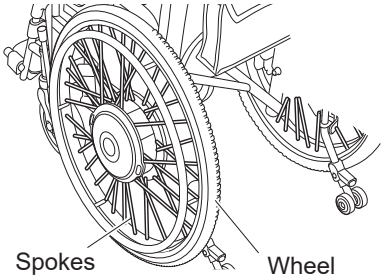

Check that the release lever is retracted, wheel axis retaining ball is locked and wheels are not come out.

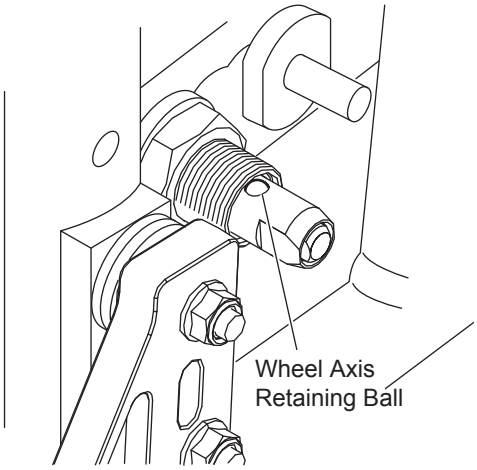

WARNING

- **There may be the risk of wheel come off during operation if wheel mounting is imperfect. Check wheels to ensure that wheels cannot come off before use.**

(5) Casters

Check to ensure that there is tire depth.
Check the tires to ensure that they are not damaged.
Check the caster forks to ensure that there are no cracks in them.
Check the nuts to ensure that they are not loose.

WARNING

- **If the air pressure in the rear tires decreases, the parking brakes may become ineffective. Always keep the air pressure in the rear tires at the correct level.**
- **Continuing to use the wheelchair with a problem in the wheelchair body or the wheels may cause sudden damage to the wheelchair while traveling, and may result in a rollover or fall.**
- **If you find any unusual condition on the wheelchair in these inspections, contact your dealership.**

(6) Battery Bag

Check that cable connectors at left and right sides are connected.

Check that hook-and-loop fastener attaching surface of upper/ lower belts are attached entire surface.
Check that no laxation/ slackness on upper/ lower fixing belts are existed.

(7) Foot Support

Check that the height of foot support is greater than 50 mm (2 inches) from the ground surface.

WARNING

- **Operate the wheelchair with its foot support height greater than 50 mm (2 inches) from the ground surface. If the height is too low, foot support may hit rough road surface and obstacles, and there may be the risk of rollover.**

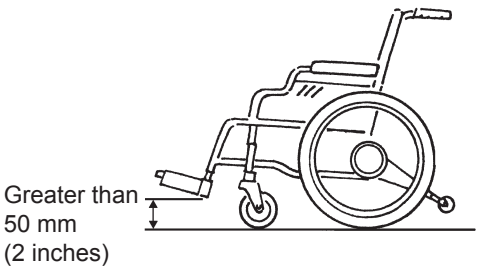

3

(8) Power Switch

Check that Power Switch is securely fixed on the wheelchair. (Try to move it while gripping entire Power Switch body.)
Check that the Power Switch is located at easy handling position.

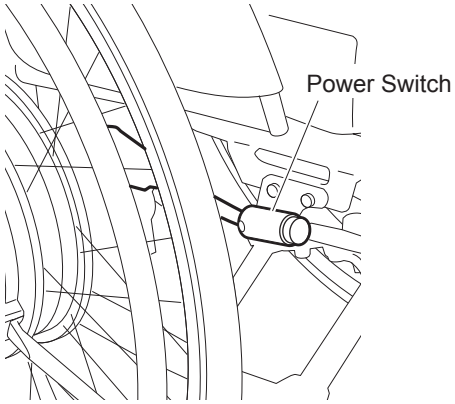

(9) Mode Switch

Check that the Mode Switch is securely fixed on the wheelchair. (Try to move it while gripping entire Power Switch body.)
Check that the Mode Switch is located at easy handling position.

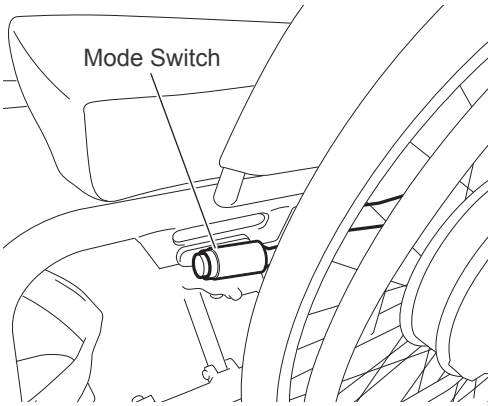

3

3.2. Checking Your Clothing

Wear bright-colored, easily visible clothing when operating the wheelchair. Do not operate the wheelchair while wearing clothing that is not suitable for wheelchair use. Refer to “1.5.5. General Operation” (Page 8).

WARNING

- **Do not travel with clothing that is not safe for wheelchairs.**
  If you drive the wheelchair with such clothing, you or other people in your surrounding may become injured.

3.3. Checking the Residual Capacity of the Battery and Installing the Battery on the Wheelchair

(1) Press the indicator switch to check the residual capacity of the battery. The residual capacity of the battery will be displayed on the capacity indicator lamps.

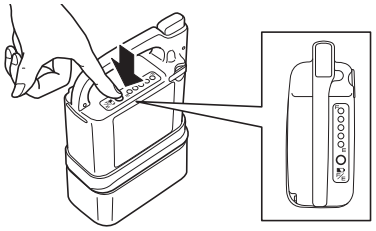

(2) Check the contacts to ensure that they are not dirty or rusted. If the contacts are dirty or severely rusted, the wheelchair may be rendered immobile.

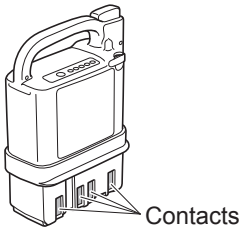

(3) Install the battery on the wheelchair.

<How to install a nickel metal hydride (Ni-MH) battery>

Turn off the power switch

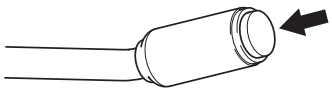

Insert the battery until it clicks.

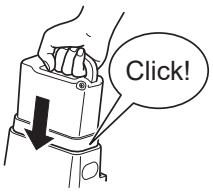

The battery mount is installed inside the Battery-bag.
Please open the Battery-bag and set the battery on the mount.

The lid is fixed to the bag using hook-and-loop fastening tape, please release it for opening.

Please set the battery facing the connector area to the bag support side (front side).

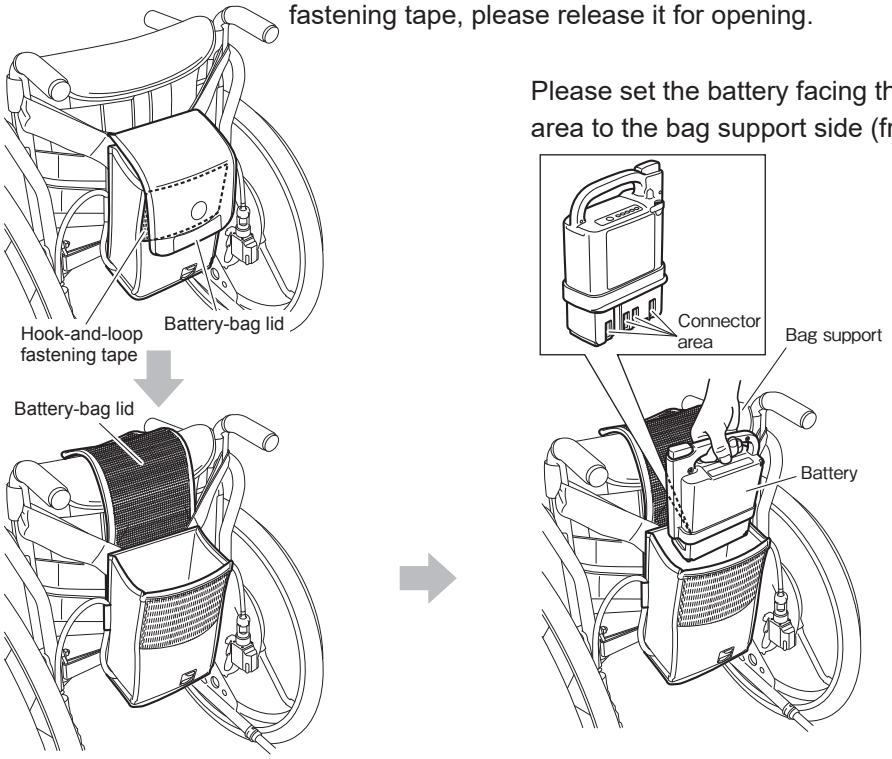

<How to install a lithium ion (Li-ion 00) battery>

Turn off the power switch.

Insert the battery.

① Pull the grip down to the side.
② Firmly insert the battery.

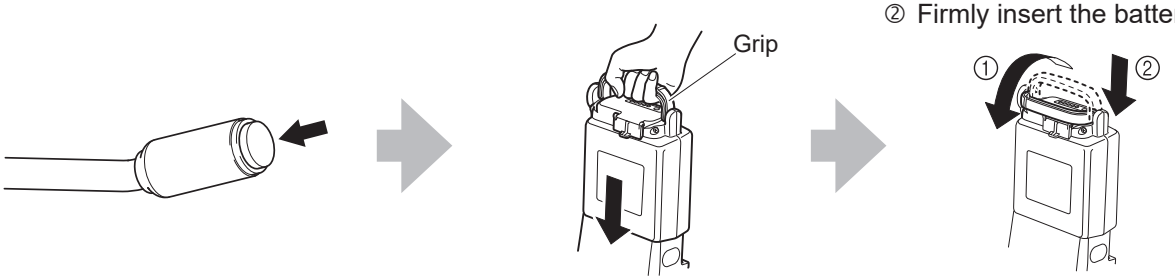

Please open the Battery-bag and insert the Battery into the bag in the same manners as that of Ni-MH Nickel Metal Hydride Battery. After inserting please pull down the grip so that the battery is firmly inserted to the position.

WARNING

- **Do not drop or apply an impact to the battery.**
  This may cause the battery to become damaged, overheat, or rupture.
- **Do not insert the battery if the battery slot is dirty or wet.**
  This may cause a short circuit and lead to a fire or battery rupture.

WARNING

- **When handling the lithium ion battery, ensure that you do not pinch your finger with the grip. Doing so may injure your finger.**

NOTICE

- **Do not replace the battery when the power is turned on. Doing so may damage the battery terminals and cause a malfunction.**

4. Riding the Wheelchair

4.1. Sitting in the Wheelchair

(1) Place the wheelchair in a level and stable location and turn off the power switch.

(2) Apply the parking brakes.

(3) Get into the wheelchair and firmly sit down so that you will not fall out.

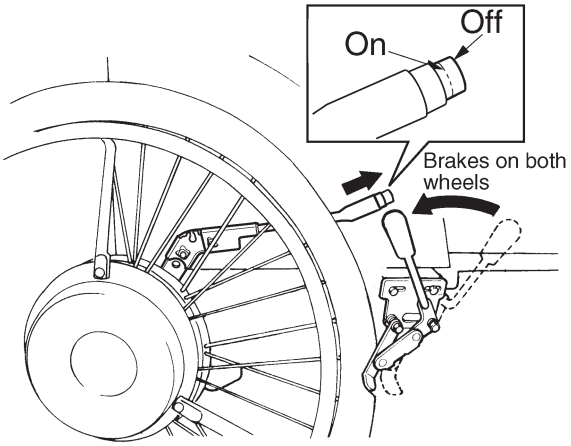

WARNING

- **Get into the wheelchair in a level and stable location. If you park the wheelchair on an incline and try to get into it from there, you may lose your balance and fall out.**
- **If you get into the wheelchair when the parking brakes are released, the wheelchair may move unexpectedly, causing you to fall out and injure yourself. When getting into the wheelchair, make sure that the parking brakes are applied.**
- **If you are using a wheelchair with no parking brakes, have the assistant hold the wheelchair to ensure that it doesn't move when you are getting into it. If you are getting into a wheelchair with no parking brakes when alone, the wheelchair may move unexpectedly, causing you to injure yourself.**

4.2. Moving the Wheelchair

(1) Power assist travel becomes enabled by turning on the power switch. When the switch is turned on, both LEDs on the power switch and on the mode switch (optional) flash the same number of times as the number of battery capacity display lamps, after small interval, this action is repeated in twice. At the same time when switch is turned on, the warning lamps installed on the back side of the drive unit also flash to inform the battery capacity in the same manner. At this time, the wheelchair can be operated.

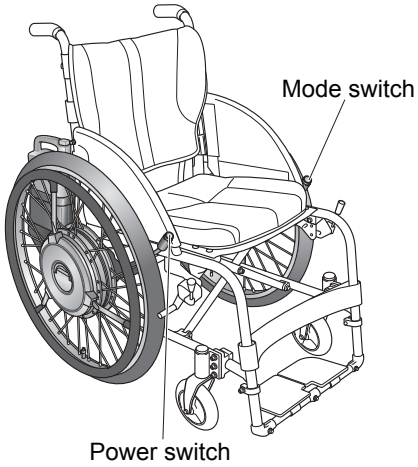

(2) (Optional) If your JWX-2 has the mode switch and, if necessary, select the running mode by pushing the mode switch. 2(two) kinds of operation mode, Mode 1 and Mode 2 can be selected.
The drive parameters on each modes are set with Smart Tune software. To set parameters, contact your dealer.

Mode 1: Always this Mode 1 is selected when the power is turned on. LED is “on”. Beep once when this Mode 1 is selected.
Mode 2: LED is “off”. Beep twice when this Mode 2 is selected.

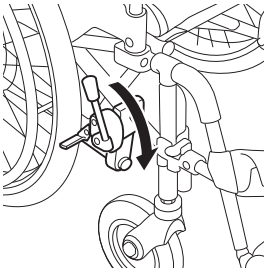

(3) Release the parking brakes

(4) The wheelchair starts to assist with you move the handrim. For beginners, refer to page 35 and 36, and practice the basic operations until you become familiar with them.

TIP **If the buzzer sounds and the wheelchair does not assist**

If force is applied to the hand rims when turning on the power, a warning beep will be heard and the safety system will be activated, inhibiting travel. Stop applying force to the hand rims, and turn on the power again.

TIP **If the buzzer beeps while traveling**

While traveling, if the load on the motor is too great, a buzzer (long Pi—, Pi—) sounds continuously.

(a) Is the live load too great?
The maximum load is 129 kg (285 lb) for JWX-2. Do not exceed the maximum load.

(b) Are you trying to go up a steep slope?
The practical climbing angle is 6 degrees. Choose a travel route that does not exceed this angle.

4.3. Checking the Residual Capacity of the Battery during Operation

During operation, you can always check the residual capacity of the battery from the battery residual capacity indicator lamp.

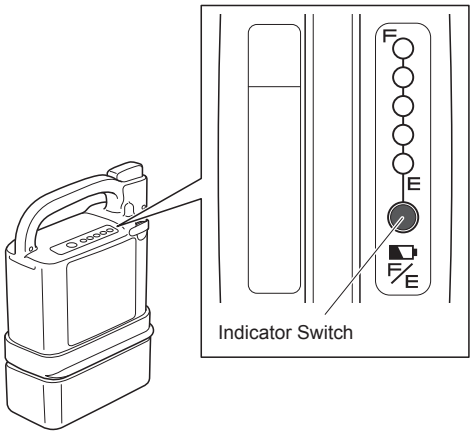

(1) When the battery residual capacity becomes less than 10%, the warning lamp flashes, and a short buzzer beeps “Pi Pi Pi Pi” 4 times.

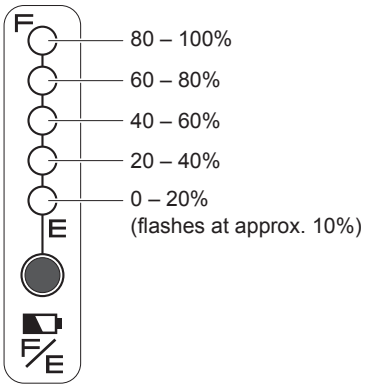

(2) Once the battery runs out, the warning lamp turns on, and a long buzzer beeps “Pi—” once and stops.

When you push down the mode switch (optional) and hold it for 2 seconds, both LEDs on the power switch and on the mode switch (optional) start blinking to inform you remaining battery capacity in the same manner when it was first switched on. This press-down action for 2 seconds will not change the driving mode.

4

4.4. Other Functions

(1) Auto power off function

With the power turned on, if the handrim are not moved for 5 minutes, the power turns off automatically. To resume operation, turn the power switch off and then back on.
Auto power off time can be changed. Contact your dealership.

WARNING

- **When the buzzer beeps to indicate low battery residual capacity, promptly move to a safe place, turn off power and charge the battery, or replace with a spare battery (sold separately). It is dangerous when you get into a situation where you cannot move with assist power, such as when crossing a road.**

4.5. Practicing Basic Operations

(1) Practice the basic operations on a safe, large, level ground.

Basic Operations 1

① In the beginning, learn how to use the handrim.

- At first, move the handrim slowly.

② Learn the feel of handrim operation.

- To go slowly, move the handrim slightly.
- To go fast, move the handrim further.
- To stop, move the handrim backward.
- To stop, apply the backward force to the handrim.

③ Try moving in the following manners.

■ Forward and stop

■ Backwards

- Familiarize yourself with the handling and performance characteristics of backward travel.
- Check behind you for safety.

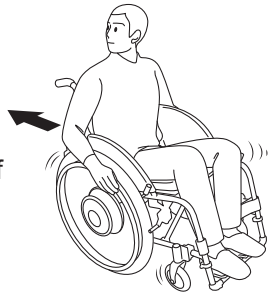

■ Turns

- Make turns on a single spot.
- Practice turning right and left.

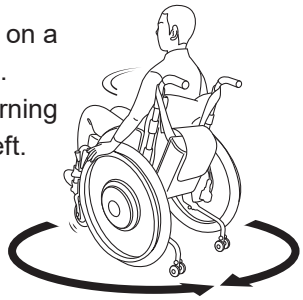

■ S-shaped curves

- Practice until you can travel in the desired direction.
- Learn the feel of speed and timing when making turns.

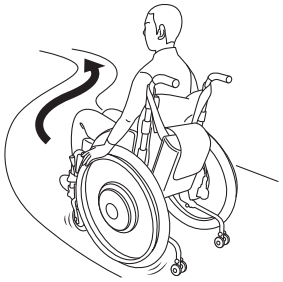

■ Avoid obstructions

- Practice avoiding obstructions.
- Stop before reaching the obstruction.

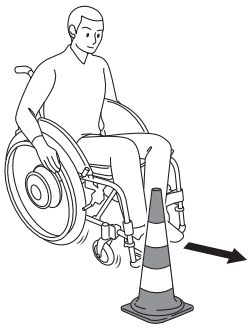

④ If the wheelchair has the mode switch, change the mode and practice in the same way.

⚠ WARNING

- **If there is an assistant, use caution to prevent colliding into him or her when moving backward.**

4

(2) Practice in an actual location where you intend to use the wheelchair.

Basic Operations 2

① **Sidewalk**

- Be careful not to bump into pedestrians and obstructions.
- Adjust your operation to suit the road surface conditions.

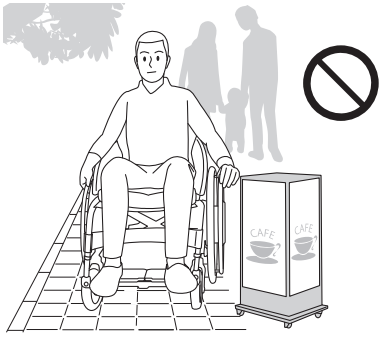

② **Up and down a level difference**

- Learn how to safely maneuver up and down a curb and know the limits.
- Stop your wheelchair before a curb, and then proceed carefully.

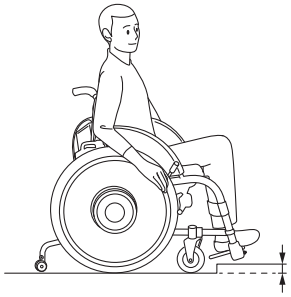

③ **Crosswalk**

- Allow sufficient time to cross the road at a crosswalk.
- Be careful with the curb between the road and the sidewalk.

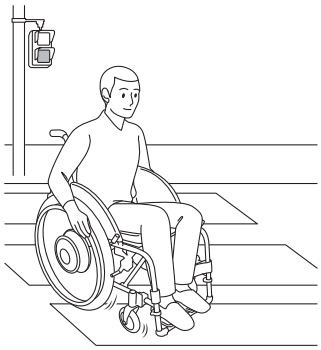

④ **Slope**

- Get the feel of riding up and down a slope.
- Restart carefully on an uphill.

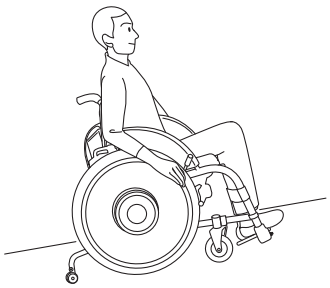

4

Basic Operations 2

⑤ Automatic door

- Practice at the proper stopping position.

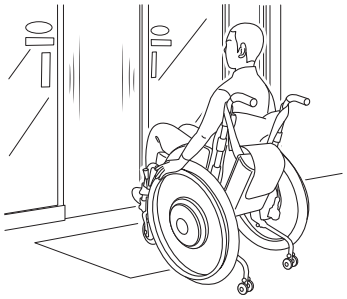

⑥ Case of Crossing a Slope

- Practice one side operation on the slope.
- Be careful specifically at steep slope.

TIP **Check the condition of the road you frequently use on wheelchair on a daily basis.**

Is there a large level difference, steep slope, or rough road?
Try to travel on a route that does not pass through such dangerous locations.

5. After You are Finished Riding the Wheelchair

5.1. Getting out of the Wheelchair

(1) Park the wheelchair on a flat location.

(2) Turn off the power switch.

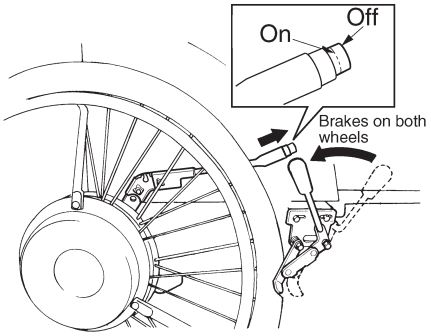

(3) Apply the parking brakes.

(4) Get off the wheelchair onto a bed, etc.

WARNING

- **After you are done traveling in power assist mode, be sure to turn the power off.**
  If the power is on when you get off the wheelchair, your body may hit against the handrim, causing it to start moving, and you or people in your surrounding may get injured.
- **Get off the wheelchair in a level and stable location. If you park the wheelchair on an incline and try to get off it from there onto a bed or a chair, you may lose your balance and fall off the wheelchair.**
- **Before getting off the wheelchair,make sure that the parking brakes are applied.**
  If you get off the wheelchair when the parking brakes are released, the wheelchair may move unexpectedly, causing you to fall out and injure yourself.

5.2. Removing the Battery

Disconnect the battery from the wheelchair.
Store the battery with the protective cap on it.

<How to remove a nickel metal hydride (Ni-MH) battery>

Turn off the power switch.

Disconnect the battery by pulling it straight upward while pressing the release button.

Store the battery with the protective cap on it.

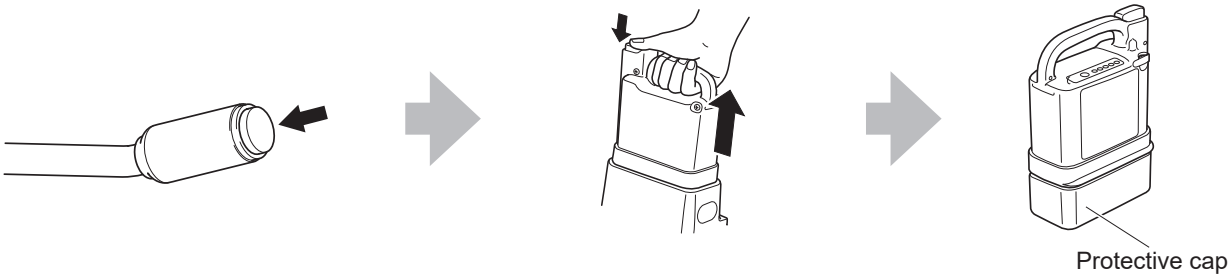

The battery is installed inside the Battery-bag.
Please open the Battery-bag and take the battery out.

The lid is fixed to the bag using hook-and-loop fastening tape, please release it for opening.

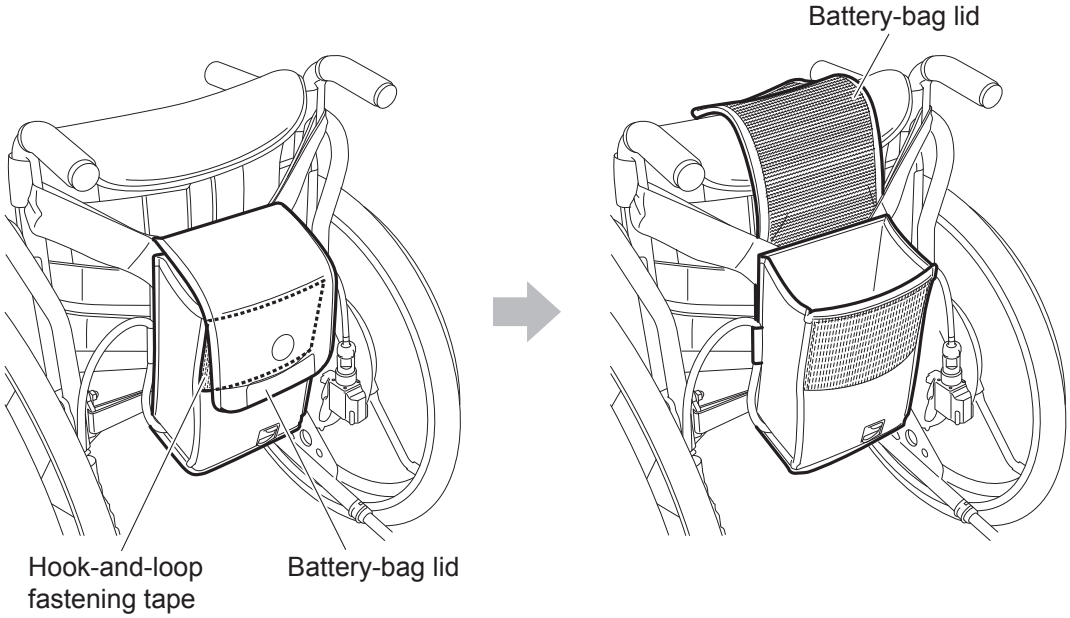

5

<How to remove a lithium ion (Li-ion 00) battery>

Turn off the power switch.

① Stand the grip upright.
② Disconnect the battery by pulling it straight upward. (Do not pull it out on an angle.)

Store the battery with the protective cap on it.

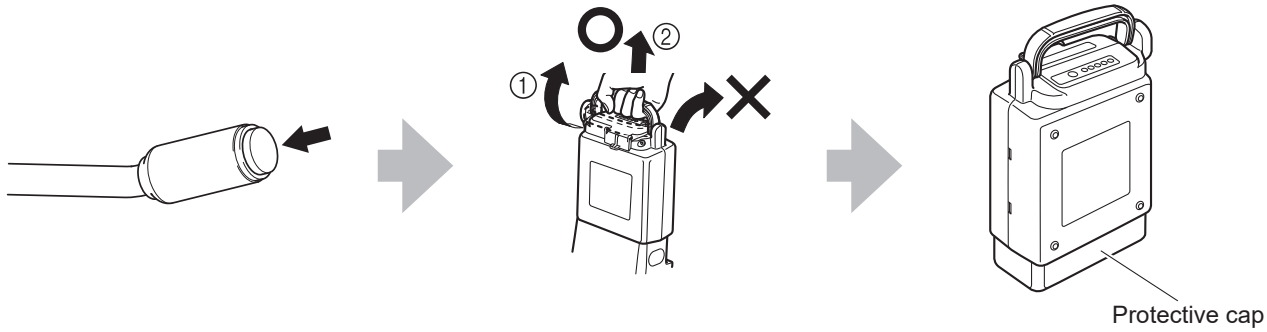

Please open the Battery-bag and take out the battery in the same manners as that of Ni-MH Nickel Metal Hydride Battery.

WARNING

- **Be sure to store the disconnected battery with the protective cap on it. Exposed contacts can cause short circuits and lead to a fire or battery rupture.**

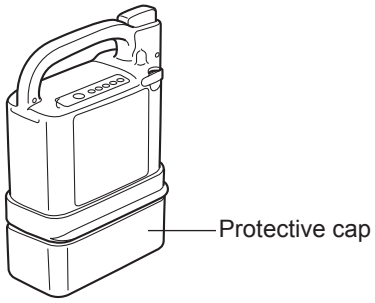

5

6. Handling the Batteries and Chargers

6.1. Types of Batteries

There are two types of batteries you can use for JWX-2.
Since the batteries differ in characteristics and charging method, first check the battery type you want to use.

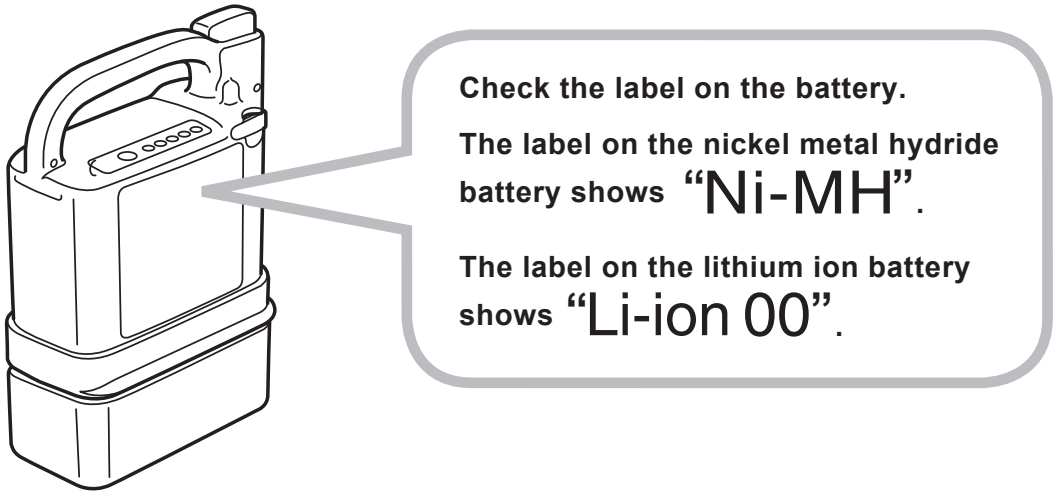

The nickel metal hydride and lithium ion batteries each come with its own charger.
Read "7. Nickel Metal Hydride Battery and Charger" if you are using a nickel metal hydride battery, and "8. Lithium Ion Battery and Charger" if you are using a lithium ion battery.

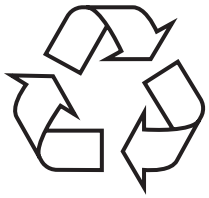

Recycling the battery
The battery for JWX-2 is a recyclable battery that contains valuable resources.
Contact the dealer to recycle your used batteries.

6.2. Maintenance

Always keep the contacts of the battery and charger clean. If the contacts are dirty, wipe them using a dry towel. Do not use a wet towel or touch the contacts directly. Otherwise, electric shock could result. If the exterior of the battery or charger is dirty, wipe it using a towel. If the dirt is excessive, use a tightly wrung-out towel.

6.3. Warnings and Notes for Battery Handling

WARNING

- **If you mishandle either of these batteries or their chargers, it may result in heat generation, rupture, electric shock, or injury. Be sure to adhere to the items below.**

Do not recharge the battery using a charger other than the designated charger, or use the battery on anything other than the specified wheelchair.

Do not touch the metal terminals of the battery or charger directly with your fingers or clean the terminals with a wet towel. Otherwise, electric shock or a short circuit could result.

Do not disassemble or modify the battery.

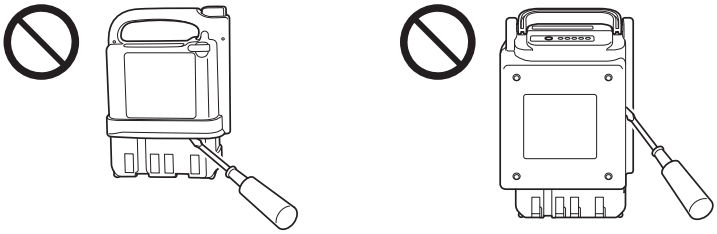

Do not place the battery near an open fire or throw it into a fire.

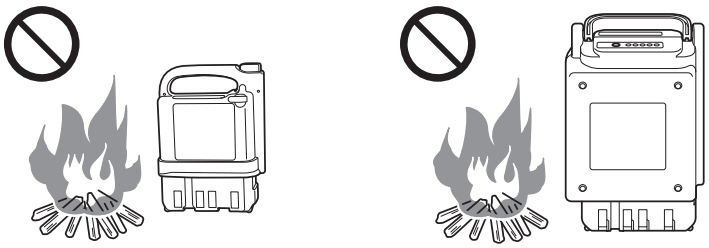

Do not place the battery in water, or splash water on it.

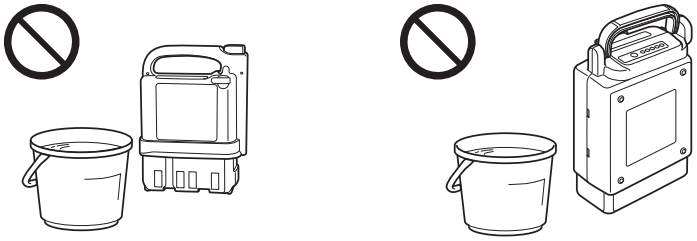

When transporting the wheelchair, in an automobile, for example, remove the battery from the wheelchair.

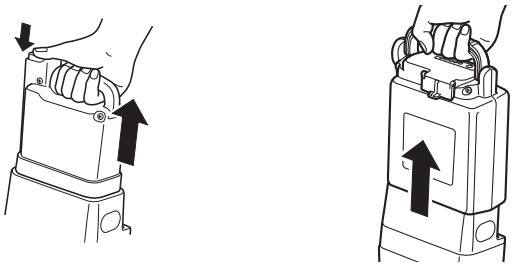

Do not short the terminals of the battery with wires or other metals. Always put on the protective cap when the battery is not in use.

6

⚠ WARNING

- **If you mishandle either of these batteries or their chargers, it may result in heat generation, rupture, electric shock, or injury. Be sure to adhere to the items below.**

Do not store the battery in a place where children or pets could come near it.

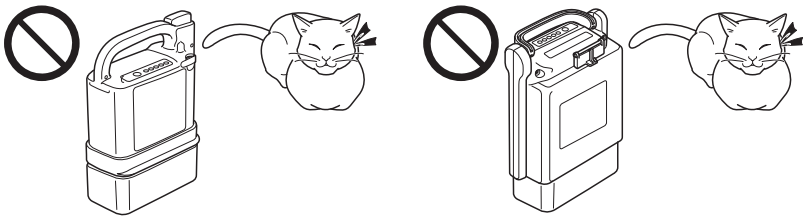

Do not drop or subject the battery to impact.

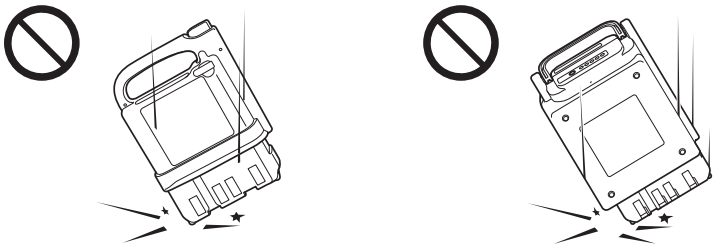

Do not use a broken or damaged battery.

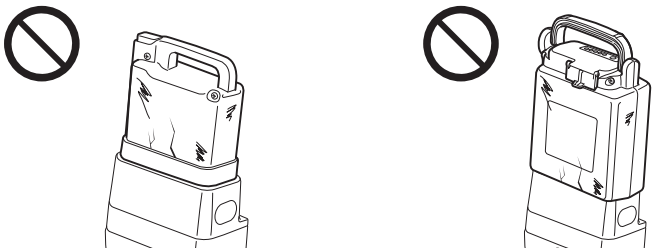

Do not charge the battery in a place where children or pets could come near it.

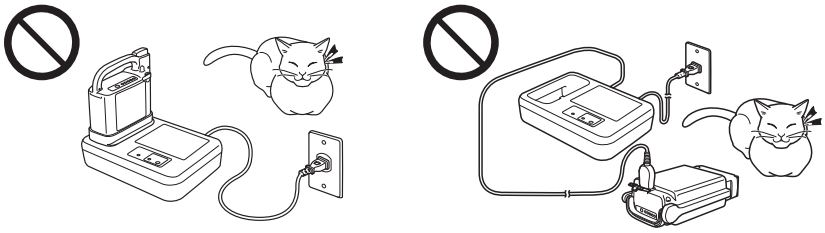

Use the charger on a level surface. After use, do not keep it plugged into the power outlet.

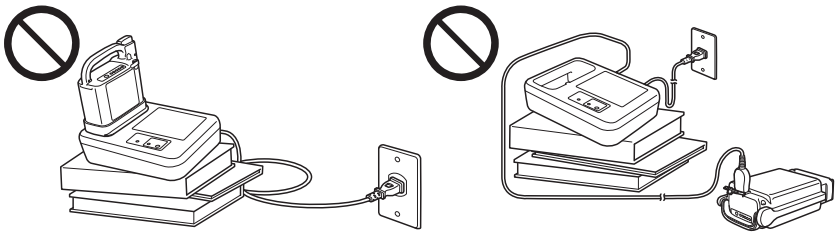

Do not use the charger outdoors or near any flammable object.

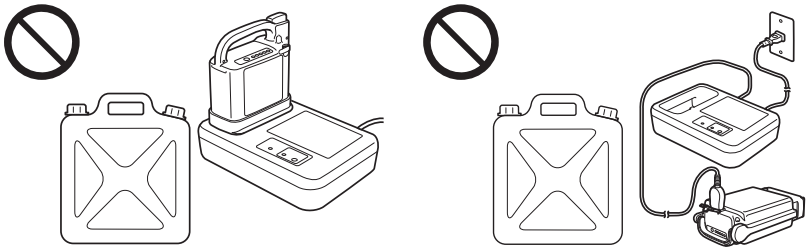

6

WARNING

- **If you mishandle either of these batteries or their chargers, it may result in heat generation, rupture, electric shock, or injury. Be sure to adhere to the items below.**

Do not use the charger, if the power plug does not fit the power outlet.

When using the extension cord with charging the battery, use it under the current capacity of the extension cord.

Do not use a damaged cord.

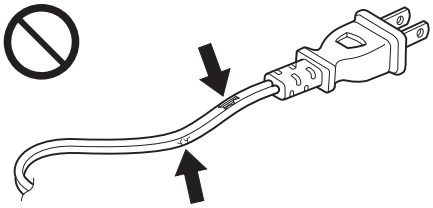

Do not touch the charger and power cord with a wet hand.
Do not use the charger submerge it in water, splash water on it or leave it in the rain.

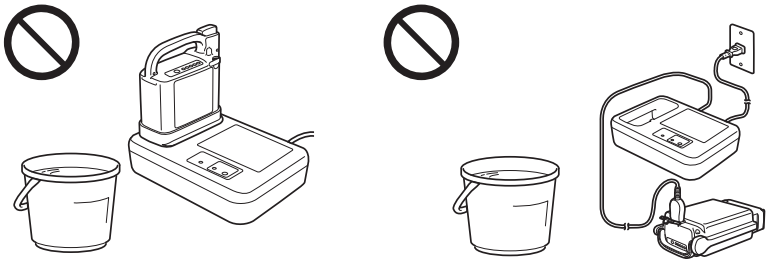

Do not disassemble or modify the charger.

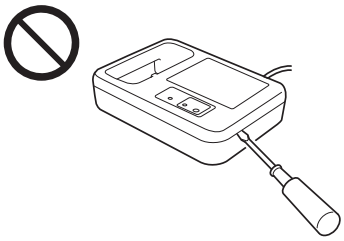

Do not drop or subject the battery to impact.

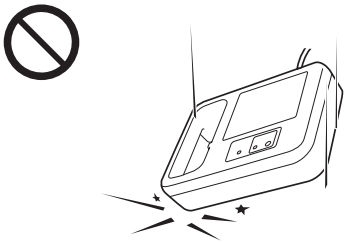

While charging, do not place anything around the charger. Make space for the heat radiation.

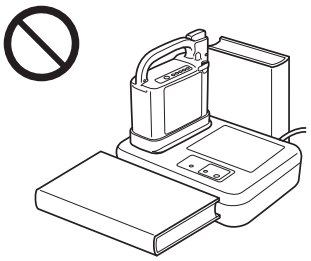

6

⚠ WARNING

Do not insert the cords or other items into the Nickel Metal Hydride battery socket.

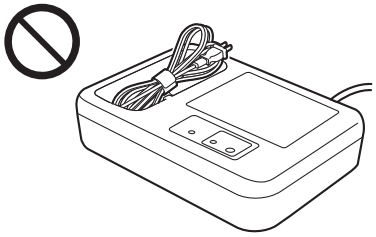

If the battery or the charger is deformed or has an unusual odor, or if you notice any other abnormality, do not use the battery or charger. Contact the dealer.

When inserting or removing the lithium ion battery, be careful not to pinch your finger with the grip. Otherwise, you may injure your finger.

Avoid prolonged contact with the skin.
It is normal for the charger to heat up while it is charging. Therefore, prolonged contact with the skin may result in a low-temperature burn injury.

7. Nickel Metal Hydride Battery and Charger

7.1. Features of the Nickel Metal Hydride Battery (JWB2)

- Equipped with Battery Management Control System (BMC). (built-in microprocessor) This is a system that uses a computer to track charge/discharge status, operating conditions, and temperature.
- Battery does not contain mercury or cadmium.
- Compact but high capacity. (Capacity: 24 V × 6.7 Ah)

7.2. How to Use the Nickel Metal Hydride Battery (JWB2)

(1) Attaching and removing the battery to and from the wheelchair

For instructions on attaching and removing the nickel metal hydride battery to and from the wheelchair, see “4. Riding the Wheelchair” and “5. After You are Finished Riding the Wheelchair”.

(2) Checking the residual capacity of the battery

Press the indicator switch to display the battery’s residual capacity.

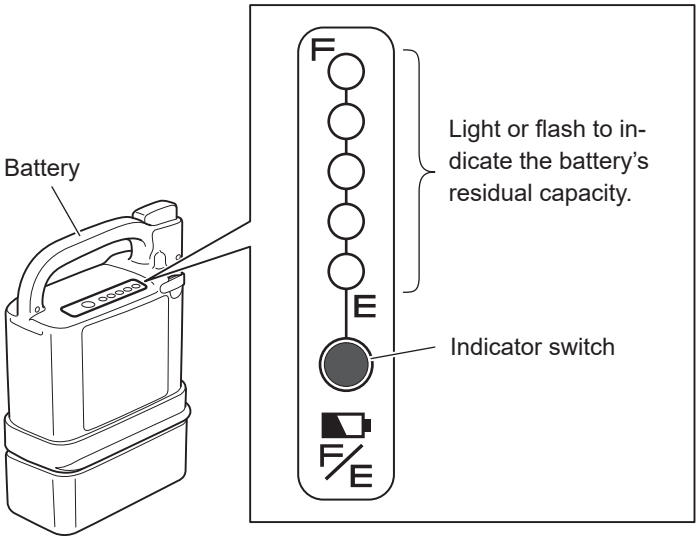

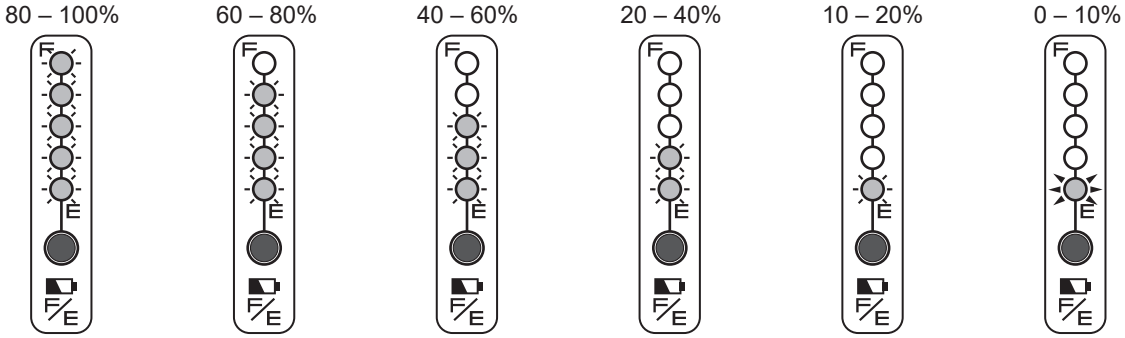

○ : Off　　: On　　: Flashing

(3) Storing the battery

Store batteries in a cool, dry area. (A location with a temperature between 10 – 25°C (50 – 77°F) is optimal for storing.)
Fully charge the battery that you do not plan to use for a long period of time (30 days or more).
If you intend to store the battery for more than 3 months without using it, fully charge the battery every 3 months.
Always put on the protective cap when storing the battery.

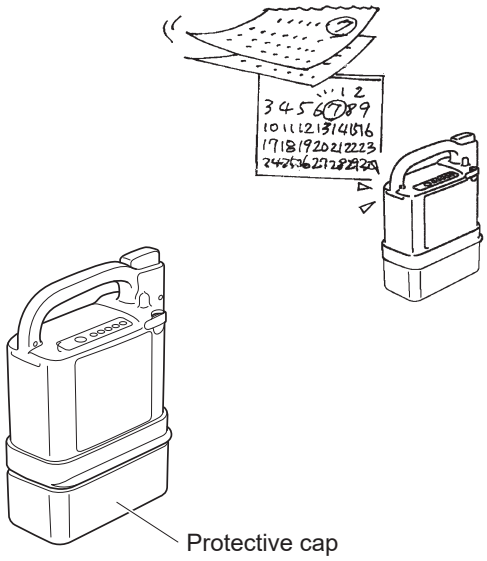

7.3. Characteristics and Handling of the Nickel Metal Hydride Battery (JWB2)

(1) Ambient temperatures

Depending on the ambient temperature, the distance that can be traveled becomes shortened.
In order to maximize the battery's performance, it is recommended that you use the battery under the following conditions.

When in use on the wheelchair: Temperature range between 0 to 35°C (32 – 95°F) When removed from wheelchair and stored: Temperature range between 10 to 25°C (50 – 77°F) When charging: Temperature range between 10 to 25°C (50 – 77°F)

- Storing the battery in excessively high or low temperatures will speed up its degradation, and its capacity will rapidly decrease.
- Using the wheelchair in excessively low temperatures will cause the battery capacity to rapidly decrease. For information on degradation, see "Battery's deterioration characteristics" on the next page.

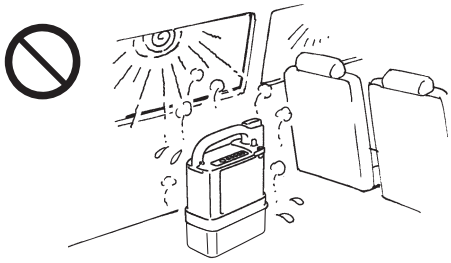

(2) Memory effect and refresh charging

When a shallow discharging and charging cycle is performed repeatedly on a nickel metal hydride battery, a phenomenon called the memory effect occurs, in which the actual usable capacity decreases.
The memory effect can be prevented and eliminated by fully discharging the battery and then recharging (refresh charging).
If refresh charging is necessary, the microcomputer in the battery sends the information to the charger and the refresh lamp on the charger flashes.
When recharging, if the refresh lamp on the charger flashes, press the refresh switch to perform a refresh charge cycle.
Refresh charging takes longer than normal charging.

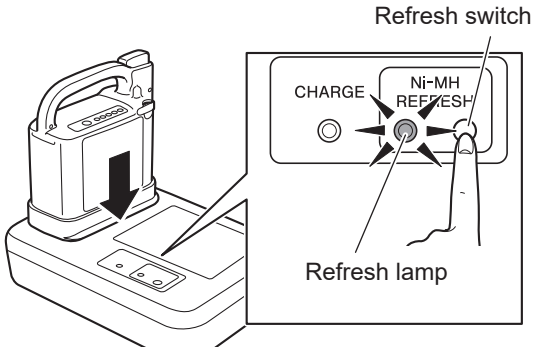

For details on refresh charging, refer to "7.5. Refresh Charging the Nickel Metal Hydride Battery (JWB2)".

(3) Battery's deterioration characteristics

All batteries are consumables. A battery gradually deteriorates and its capacity decreases over time and with use.
The extent to which the capacity decreases by deterioration depends on the use conditions.

TIP For a nickel metal hydride battery, its capacity will decrease to approximately 60% of that of a new battery after 300 charge/discharge cycles, under normal use.

Even if a battery is not used, when it is stored over a long period of time, its capacity will decrease. When you are using multiple batteries, alternate between the batteries.

The extent of the deterioration of a nickel metal hydride battery can be checked after charging is done, by pushing the indicator switch.

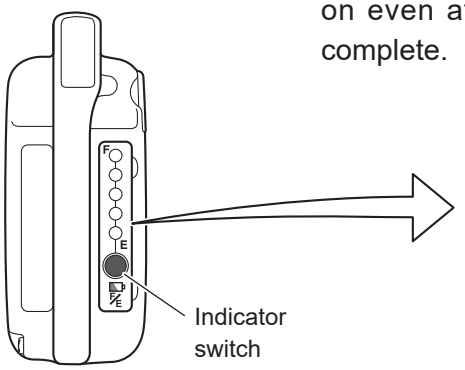

The 5th lamp does not turn on even after charging is complete.

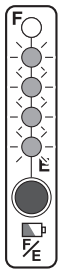

The capacity has deteriorated to less than 80%

The 4th and 5th lamps do not turn on even after charging is complete.

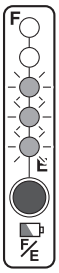

The capacity has deteriorated to less than 60%

7.4. How to Charge the Nickel Metal Hydride Battery (JWB2)

WARNING

- **This charger is not intended for use by persons (including children) with reduced physical, sensory or mental capabilities, or lack of experience and knowledge, unless they have been given supervision or instruction concerning use of the charger by a person responsible for their safety. Children should be supervised to ensure that they do not play with the charger.**
- **Do not use the power cord if it is damaged.**
  If the power cord is damaged, it must be replaced by a special cord or assembly available from the manufacture or its service agent.

NOTICE

- **Do not use this charger if the power cord is wound around the unit.**
  Otherwise, the charger may overheat and be damaged.
- **Make sure that the charging plug and the battery charging connector are free of dust, dirt, oil, and moisture. Also, do not insert any metallic object or other foreign substance into the plug or the connector, for this may cause the charger to malfunction or damage the battery.**
- **Do not place the charger in locations exposed to direct sunlight, near a heater or other heat source, or where the temperature may drop below freezing.**
  If the charger or the battery becomes hot, the charger protection function may prevent the unit from starting or turn it off while it is charging.
  Also, the protection function activates if the charger is cold.
- **Keep the area around the charger free of other objects and do not place a cover or similar item over the unit.**
  The charger protection function may activate if the flow of air is blocked.
- **Be sure to use the genuine power cord.**

(1) Charging time

Charging time: 2.5 – 3 hours (when charging the battery from an empty state)
Refresh charging time: 3 – 19 hours (the actual time varies depending on the residual capacity of the battery)

(2) Charging

① Place the charger on a flat, stable surface with the charge indicator lamp facing up.

② Insert the charger plug into the dedicated charger (ESC3) and insert the power plug into the residential power outlet.

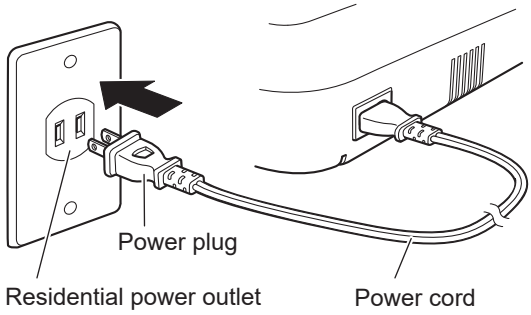

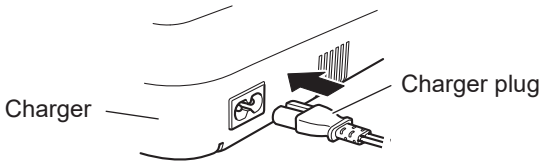

③ Insert the battery into the charger as shown in the diagram.

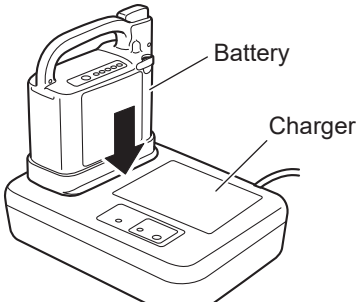

TIP After plugging in the charger, it takes about 5 seconds for the charging lamp to light.

④ The charge lamp (green) on the charger turns on, and the battery starts charging.
The capacity indicator lamps on the battery flash, and the number of lamps that are lit increases according to the charging level.

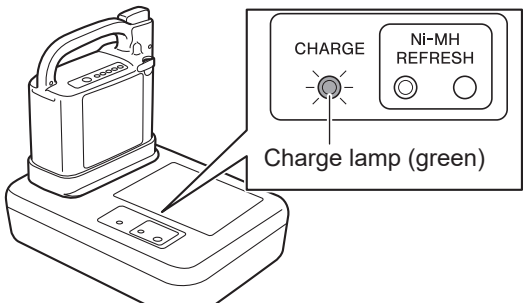

If the charge lamp (green) does not turn on, and the refresh lamp (orange) flashes, refer to “7.5. Refresh Charging the Nickel Metal Hydride Battery (JWB2)”.

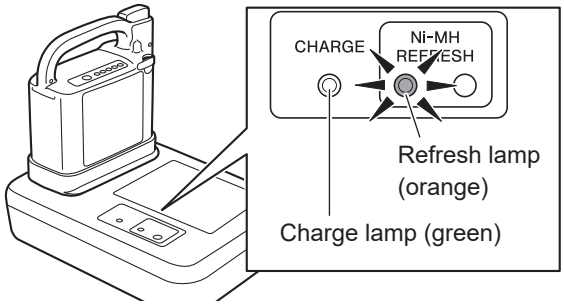

7

TIP Assuming the charging process started from an empty state, the time it takes from start to completion of the charging process is typically 2.5 to 3 hours.
If charging in a location with a high temperature or if charging a brand new battery, this may take longer.

⑤ Check to ensure that charging is complete.
When charging is complete, the battery capacity indicator lamps and the charge lamp (green) on the charger turn off.

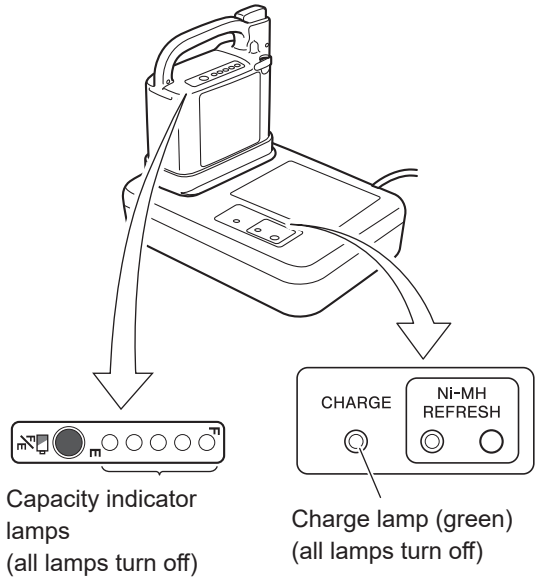

After charging is complete, you can check the charged capacity by pressing the battery indicator switch.
If not all of the lamps turn on, the following could have occurred:

- While charging, the temperature of the battery rose excessively, causing the protection mechanism to abort the charging process.
- The battery deterioration has advanced and the capacity is decreasing.

and so on.

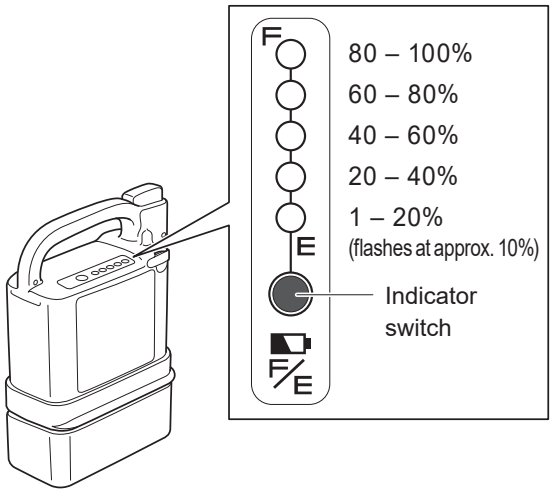

⑥ Unplug the power cord from the power outlet.

NOTICE

- **Do not pull on the power cord. This can cause the wires to break.**

⑦ Remove the battery from the charger.
If you want to store the battery in this state, put the protective cap on.

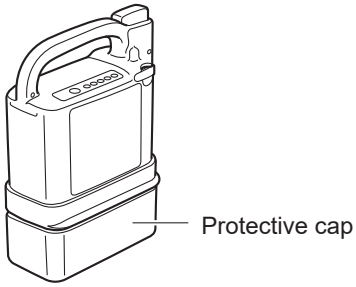

WARNING

- **Be sure to store the disconnected battery with the protective cap on it.**
  Exposed contacts can cause short circuits and lead to a fire or battery rupture.

TIP **If you are unable to charge the battery**

Refer to “13. Troubleshooting, Repairs, Warranty”.

- If the vehicle has traveled a long distance or on a long uphill grade, or if it has been left outside in the cold for a long time, the battery temperature may not be suitable for charging.
  In such a case, the charger may not start charging (remains in standby mode) until the battery has reached a suitable temperature.

(3) Suitable temperature for charging

Charge the battery in an environment with a temperature of 10 to 25°C (50 to 77°F).

- To protect the battery, if the internal temperature of the battery is under 0°C (32°F) or over 40°C (104°F), charging does not start. Instead, it enters a standby mode. During this time, the charge lamp (green) flashes.
  While in standby mode, when the battery reaches an appropriate temperature, the charge lamp will change from a flashing to an “on” state, and charging will start automatically. (The length of the standby time varies with conditions.)

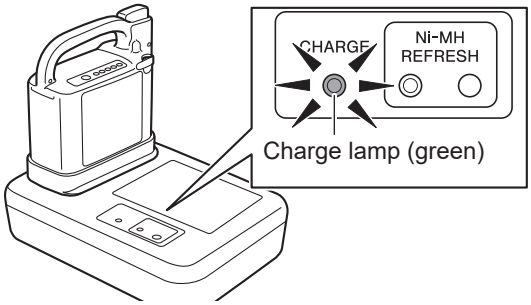

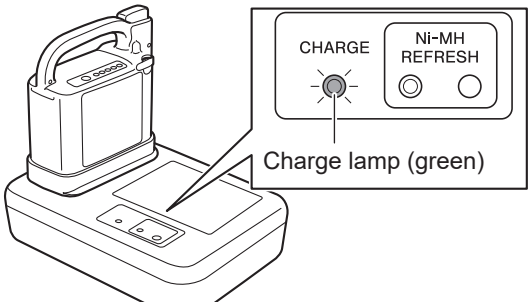

- The battery temperature increases during charging. However, if the battery temperature rises above 50°C (122°F), the power for the charger will turn off to protect the battery.
  Since charging has not ended, it is necessary to charge again after the battery temperature has decreased.
  Charging a battery immediately after travel, or charging a new battery is likely to cause its temperature to increase, which increases the likelihood of the charger stopping charging before completion.

7.5. Refresh Charging the Nickel Metal Hydride Battery (JWB2)

A refresh charging is required on a nickel metal hydride battery to eliminate the memory effect.
When the battery is inserted to the charger, if the refresh lamp (orange) on the charger flashes, press the refresh switch to perform a refresh charge cycle. (The refresh lamp flashes after every 20 to 30 charge cycles. If the refresh lamp does not flash, it is not necessary to perform a refresh charge cycle.)

(1) While the refresh lamp (orange) is flashing, press the refresh switch.

* The refresh lamp (orange) flashes only when refresh charging is needed.

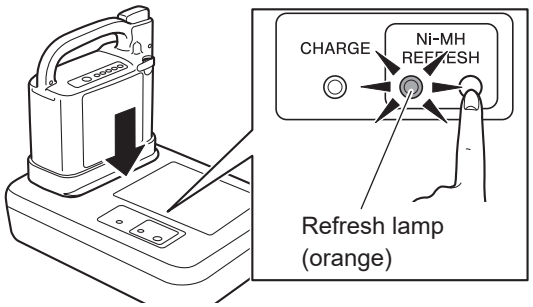

(2) The refresh lamp (orange) changes from a flashing to an “on” state, and the refresh charging starts.

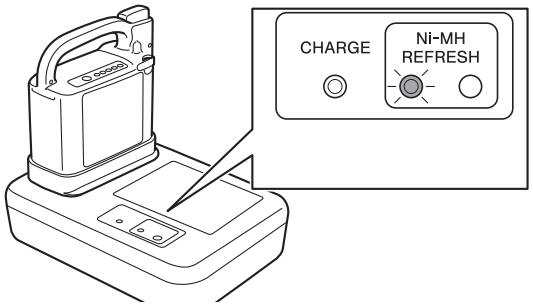

In a refresh charging process, after all remaining electricity has been discharged, the refresh lamp (orange) turns off. The charge lamp (green) comes on and a normal charging process begins. The time it takes from the start of refresh charging to the completion of normal charging is 3 – 19 hours.

- If the temperature of the battery rises during a refresh charge, the charge lamp (green) may flash and the charging process may pause.
  When the battery reaches an appropriate temperature, the charge lamp will change from a flashing to an “on” state and charging will start automatically.
- If you perform a refresh recharge when the internal temperature of the battery is under 0°C (32°F) or over 40°C (104°F), it may enter a standby mode as it goes into normal charging after discharging the remaining electricity.
- Even if you fail to press the refresh switch, you can retry by momentarily removing the battery from the charger, and then reinserting the battery to see the refresh charging alert.
- If you do not press the refresh switch while the refresh lamp (orange) is flashing, the flashing refresh lamp will turn off after 1 minute. Then the charge lamp comes on and a normal charging process begins. In this case, the refresh lamp flashes again the next time you charge the battery.

TIP **Tips on charging**

- It is recommended that you charge the battery while you are sleeping.
- Since the refresh charging process recharges after discharging all of its remaining electricity, it will take a long time if you perform it on a battery with a high residual capacity. It is recommended that you perform a refresh charging on a battery that is drained as much as possible.

7.6. Charger (ESC3) Indicator Lamps

The charger (ESC3) for the nickel metal hydride battery has two types of lamps: the charge lamp (green) and refresh lamp (orange). Each lamp comes on or flashes to indicate the battery and charging conditions.
The lamp indications are explained in the following table.

TIP

- Standby mode may be activated, and the charge indicator lamp may flash green once per second if the ambient temperature changes while the charger is charging. When the temperature is suitable for charging, the charge indicator lamp will stop flashing and remain on green, and the charging operation will automatically re-start.
- If standby conditions continue for a long time, the charge indicator lamp will start flashing green rapidly (five times per second) and the charging operation will be terminated.
  If this happens, unplug the charging plug and the power plug. Re-locate the charger in accordance with “7.4. How to Charge the Nickel Metal Hydride Battery (JWB2)”, and try to charge the battery again.
- The charger protection function may be activated by a change in the ambient temperature even while charging is in progress. In this case, the charge indicator lamp will flash red and the charger will stop charging.
  If this happens, unplug the charging plug and the power plug. Re-locate the charger in accordance with “7.4. How to Charge the Nickel Metal Hydride Battery (JWB2)”, and try to charge the battery again.

Charger lamp indication	Battery capacity indicator lamps	Description
Charge lamp (green) is on 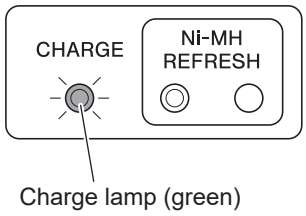 	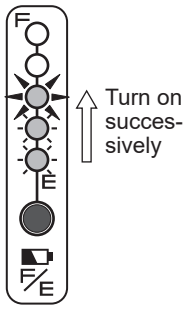 	Indicates normal charging. The charge lamp will turn off after charging is completed.
Lit or flashing red 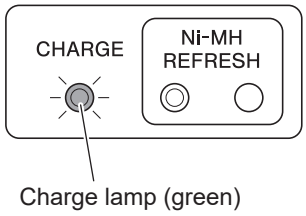 	 	The charger has detected a problem in the charger or the battery, and is unable to charge. Stop charging by disconnecting the charger plug and the power plug. Check the battery, charger, and cord connection for any problem, and then try charging again. If the charge lamp light comes on or flashes in red again, an equipment failure may have occurred. Stop charging by disconnecting the charger plug and the power plug, and have the equipment inspected by a dealer.

7

Charger lamp indication	Battery capacity indicator lamps	Description
Charge lamp (green) is flashing (once per second) 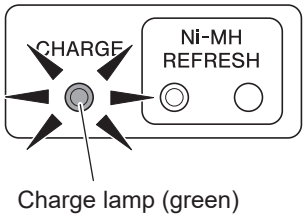 	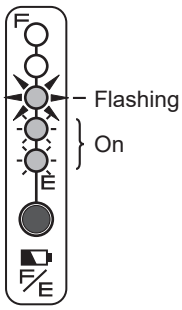 	Indicates charge standby. • When the temperature of the battery is not within the chargeable range 0 to 40°C (32 to 104°F), the charger enters a standby state and the charge lamp (green) starts flashing. • Once the battery temperature falls within the chargeable range during standby, charging will start automatically and the charge lamp (green) changes from a flashing to an “on” state. However, if the charge standby condition continues for a long time, charging will end, and the power for the charger will turn off.
Charge lamp (green) is flashing (5 times per second) 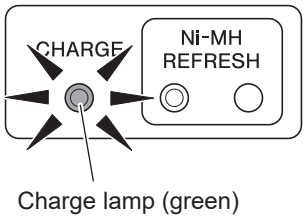 	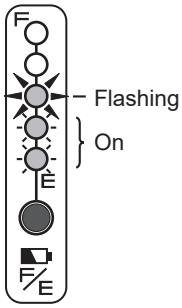 	Indicates timeout of charge standby. • The charger has remained in standby mode for a long time and has stopped charging the battery. Re-locate the charger and try to charge the battery again.
Refresh lamp (orange) is flashing 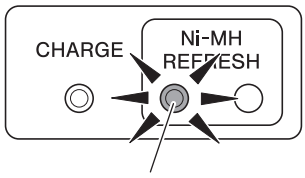 	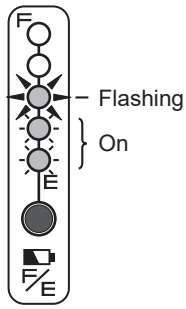 	Refresh charging is being requested. While the refresh lamp is flashing, press the refresh switch to perform a refresh charge cycle. If you do not press the refresh switch, a normal charging begins after 1 minute.
Refresh lamp (orange) is on 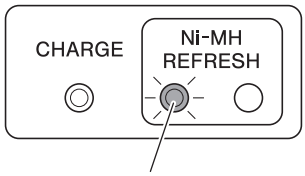 	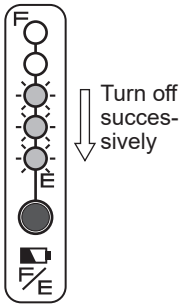 	Indicates refresh charging. The remaining electricity is being discharged as part of the refresh charging process. When the discharge has completed, normal charging will start.

8

8. Lithium Ion Battery and Charger

8.1. Features of the Lithium Ion Battery (ESB1)

- Has a higher energy capacity compared to the nickel metal hydride battery.
- Equipped with Battery Management Control System (BMC). (built-in microprocessor) This is a system that uses a computer to track charge/discharge status, operating conditions, and temperature.
- Even with repeated shallow discharge/charge cycles, it is difficult for the memory effect to occur. Therefore, refresh charging is not necessary, and its charges can be replenished additively.
- Battery does not contain mercury or cadmium.
- Compact but high capacity. (Capacity: 25 V × 11.8 Ah)

8.2. How to Use the Lithium Ion Battery (ESB1)

(1) Attaching and removing the battery to and from the wheelchair

For instructions on attaching and removing the lithium ion battery to and from the wheelchair, see “4. Riding the Wheelchair” and “5. After You are Finished Riding the Wheelchair”.

(2) Checking the residual capacity of the battery

Press the indicator switch to display the battery’s residual capacity.

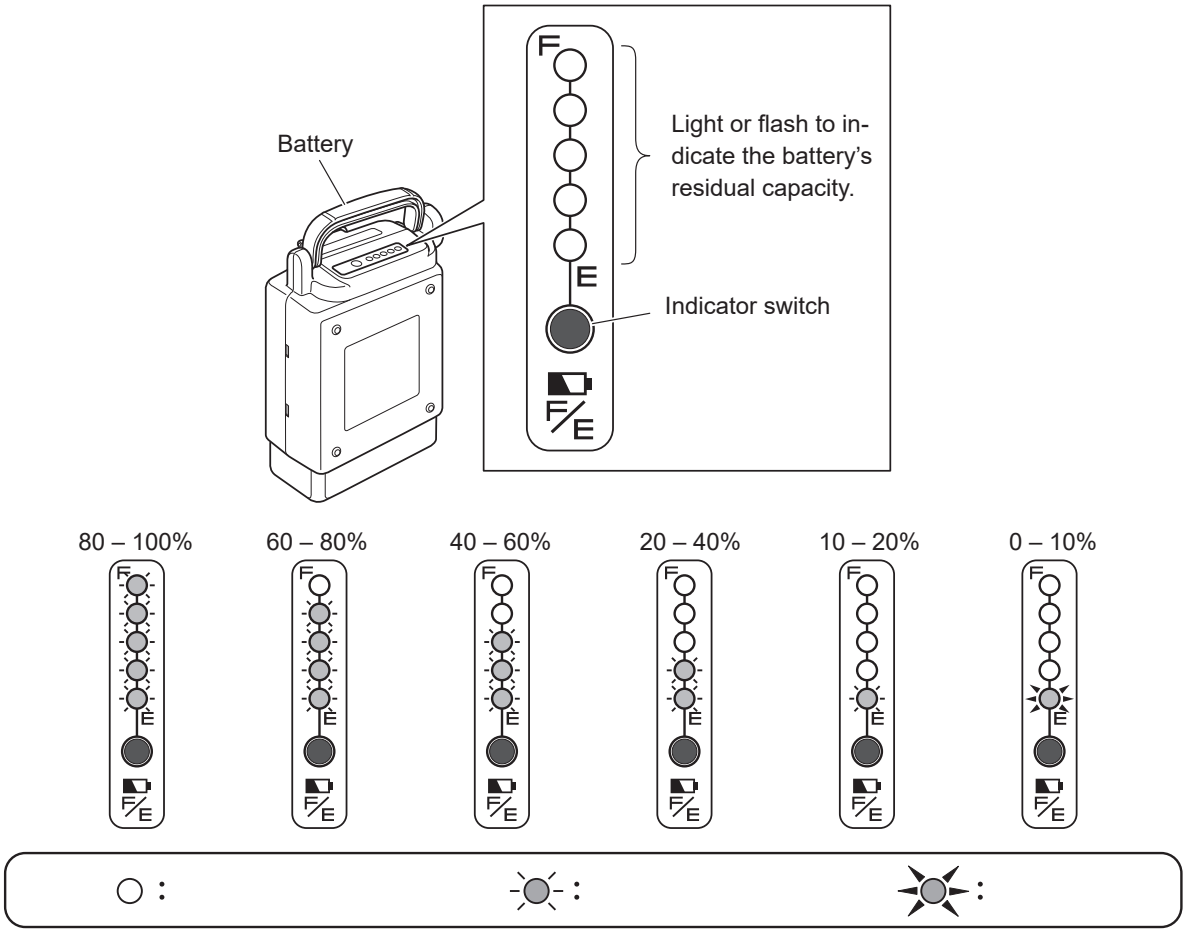

(3) Storing the battery

Store batteries in a cool, dry area. (A location with a temperature between 10 to 25°C (50 to 77°F) is optimal for storing.)
If you are not planning on using the battery for a long period of time (30 days or more), charge it so that 3 of the capacity indicator lamps comes on, and then store it.
To store the battery without using it for over 3 months, check every 3 months to see if 3 capacity indicator lamps light up.
If 2 or less lamps turn on, charge the battery until 3 lamps turn on.
Always put on the protective cap when storing the battery.

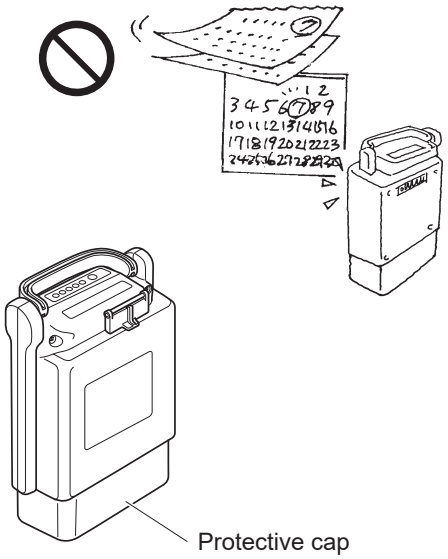

WARNING

- **Be sure to store the disconnected battery with the protective cap on it.**
  Exposed contacts can cause short circuits and lead to a fire or battery rupture.

TIP

- **If you are unable to charge the battery**
  Refer to “13. Troubleshooting, Repairs, Warranty”.

- If the vehicle has traveled a long distance or on a long uphill grade, or if it has been left outside in the cold for a long time, the battery temperature may not be suitable for charging.
  In such a case, the charger may not start charging (remains in standby mode) until the battery has reached a suitable temperature.

8.3. Characteristics and Handling of the Lithium Ion Battery (ESB1)

(1) Ambient temperatures

Depending on the ambient temperature, the distance that can be traveled becomes shortened.
In order to maximize the battery's performance, it is recommended that you use the battery under the following conditions.

When in use on the wheelchair:
Temperature range between 0 to 35°C (32 to 95°F)
When removed from wheelchair and stored:
Temperature range between 10 to 25°C (50 to 77°F)
When charging:
Temperature range between 10 to 25°C (50 to 77°F)

- Storing the battery in excessively high or low temperatures will speed up its degradation, and its capacity will rapidly decrease.
- Using the wheelchair in excessively low temperatures will cause the battery deterioration to speed up and its capacity to rapidly decrease. For information on degradation, see "Battery's deterioration characteristics" on the next page.

TIP **While traveling, if the internal temperature of the lithium ion battery becomes too high or too low, a buzzer will notify you.**

- When using a lithium ion battery, a buzzer will beep (continuous "Pi Pi Pi Pi") if the battery's internal temperature drops to 0°C (32°F) or below, or rises to 45°C (113°F) or above for 5 seconds.
- When the buzzer beeps, promptly return to the environment within the recommended range of operational temperatures, and use the battery there.
- When descending down a slope on the wheelchair, the drive motor, contrary to normal operation, generates electricity and charges the battery. Charging a lithium ion battery when its temperature is 0°C (32°F) or below/45°C (113°F) or above causes its deterioration to progress extremely rapidly. For this reason, when you are descending down a slope in such temperatures, the wheelchair may stop moving to protect the battery.
  When this happens, you will hear 5 long beeps before the wheelchair stops, and then another long beep 10 seconds later as the wheelchair stops.

(2) Battery's deterioration characteristics

All batteries are consumables. A battery gradually deteriorates and its capacity decreases over time and with use.
The extent to which the capacity decreases by deterioration depends on the use conditions.

TIP For a lithium ion battery, its capacity will decrease to approximately 60% of that of a new battery after 700 charge cycles, under normal use.

Even if a battery is not used, when it is stored over a long period of time, it will deteriorate and its capacity will decrease.
When you are using multiple batteries, alternate between the batteries.

TIP Immediately after the lithium ion battery has successfully completed charging (fully charged), pushing the indicator switch will always show all 5 lamps lit. Even if deterioration has progressed, all 5 lamps should turn on when fully charged. This display format was adopted for this battery, as the rate of deterioration of lithium ion batteries is gradual.

(3) The life of the lithium ion battery

The life of the lithium ion battery (ESB1) is 8 years from its initial charging, or 8,000 Ah of integral charge capacity.

- Battery life alert
  The capacity indicator lamps start alerting you from 3 months prior to the battery becoming no longer chargeable due to its end-of-life, or when the integral charge capacity reaches 7,800 Ah.
  When charging has completed and the charger plug is unplugged, the capacity indicator lamps turn on and off as shown in the figure on the right.

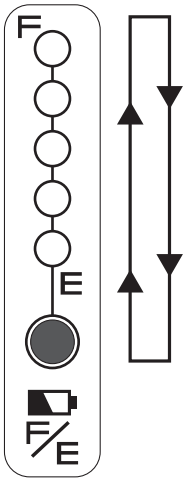

The capacity lamps turn on and off repeatedly for 5 seconds, in the order of the arrows.

- When the battery reaches end of life
  Once the battery reaches its end of life, the lamp on the charger will not turn on when attempting to charge the battery. Moreover, the battery's capacity indicator lamps no longer turn on and the battery cannot be charged.

TIP **If you forget the date you started to use the lithium ion battery.**

The battery's manufactured date is printed on its bottom. Use it as a reference.

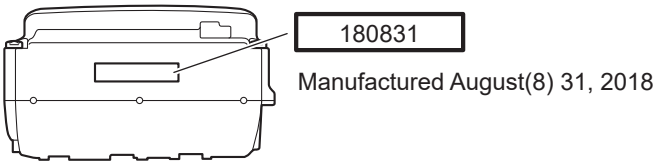

- The start date of battery usage is defined as the date the user charged the battery for the first time after shipment from the factory.
  (This does not match the manufactured date above.)

- Once the integral charge capacity reaches 8,000 Ah, the battery will not be usable even if it has not been 8 years.

* The integral charge capacity of 8,000 Ah is approximately 700 times the capacity of the "ESB1" lithium ion battery (hence equivalent to approximately 700 charge cycles, when fully charged from 0 residual capacity).

8.4. How to Charge the Lithium Ion Battery (ESB1)

There are two ways to charge the battery; by removing it from the wheelchair (tabletop charging), or while it is still attached to the wheelchair (on-vehicle charging).

WARNING

- **This charger is not intended for use by persons (including children) with reduced physical, sensory or mental capabilities, or lack of experience and knowledge, unless they have been given supervision or instruction concerning use of the charger by a person responsible for their safety. Children should be supervised to ensure that they do not play with the charger.**
- **Do not use the power cord if it is damaged.**
  If the power cord is damaged, it must be replaced by a special cord or assembly available from the manufacture or its service agent.

NOTICE

- **Do not use this charger if the power cord is wound around the unit.**
  Otherwise, the charger may overheat and be damaged.
- **Make sure that the charging plug and the battery charging connector are free of dust, dirt, oil, and moisture. Also, do not insert any metallic object or other foreign substance into the plug or the connector, for this may cause the charger to malfunction or damage the battery.**
- **Do not place the charger in locations exposed to direct sunlight, near a heater or other heat source, or where the temperature may drop below freezing.**
  If the charger or the battery becomes hot, the charger protection function may prevent the unit from starting or turn it off while it is charging.
  Also, the protection function activates if the charger is cold.
- **Keep the area around the charger free of other objects and do not place a cover or similar item over the unit.**
  The charger protection function may activate if the flow of air is blocked.
- **Be sure to use the genuine power cord.**

(1) Charging time

Charging time: Approx. 4.5 hours (when charging the battery from an empty state)

(2) Charging the battery out of the unit (tabletop charging)

① Place the charger on a flat, stable surface with the charge indicator lamp facing up.

② Check that the protective cap is on the battery.
If the protective cap is not attached, be sure to attach it.

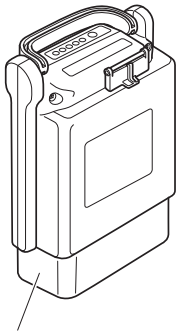

③ Insert the power plug of the dedicated charger (ESC3) into the residential power outlet.

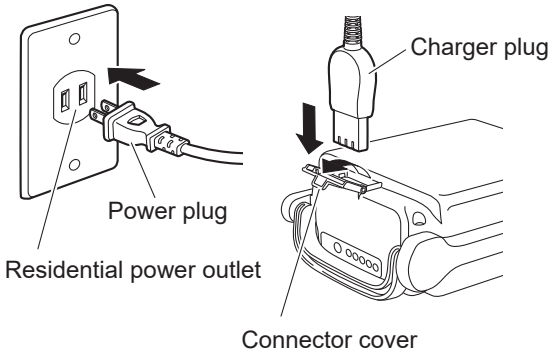

TIP After plugging in the charger, it takes about 5 seconds for the charging lamp to light.

④ Rest the battery on its side.

⑤ Open the connector cover, and insert the charger plug into the charge connector on the battery.

⑥ Check that the charge lamp (green) on the charger turns on.
If the charge lamp does not light green, see “8.6. Charger (ESC3) Indicator Lamps”.

⑦ While charging, you can check the charge status using the capacity indicator lamps on the battery.
The capacity indicator lamps will turn off after charging has completed.
Assuming that charging started with the battery in an empty state, the time to completion is typically 4.5 hours.

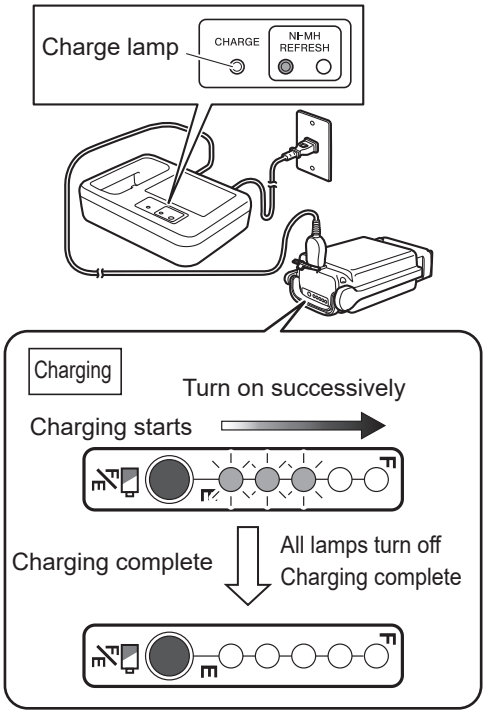

⑧ After charging has completed, unplug the charger plug and the power plug, then securely close the battery's connector cover.

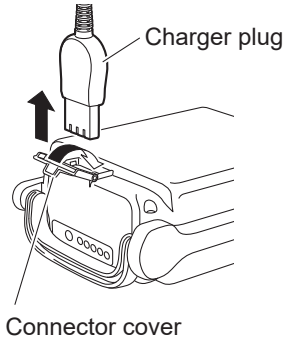

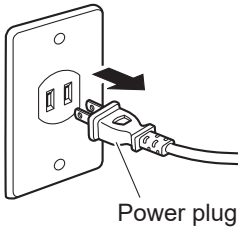

NOTICE

- **Do not pull on the power cord. This can cause the wires to break.**

(3) Charging the battery attached to the wheelchair (on-vehicle charging)

① Prepare for charging.
Remove any bags and luggage from the backrest, and anything else that can potentially tangle the charge cable.
Park the wheelchair indoor on a level floor, and apply the parking brakes.

② Turn off the power switch on the wheelchair.
As a safety measure, during on-vehicle charging, the wheelchair will not power on even if it is switched on.

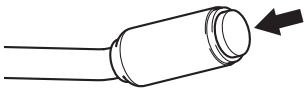

③ Insert the power plug of the dedicated charger (ESC3) into the residential power outlet.

④ Open the connector cover, and insert the charger plug into the charge connector on the battery.

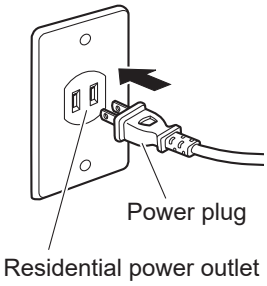

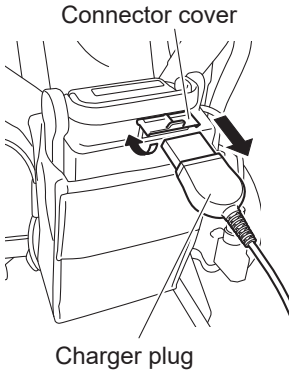

⑤ Check that the charge lamp (green) on the charger turns on.
If the charge lamp does not comes on green, see “8.6. Charger (ESC3) Indicator Lamps”.

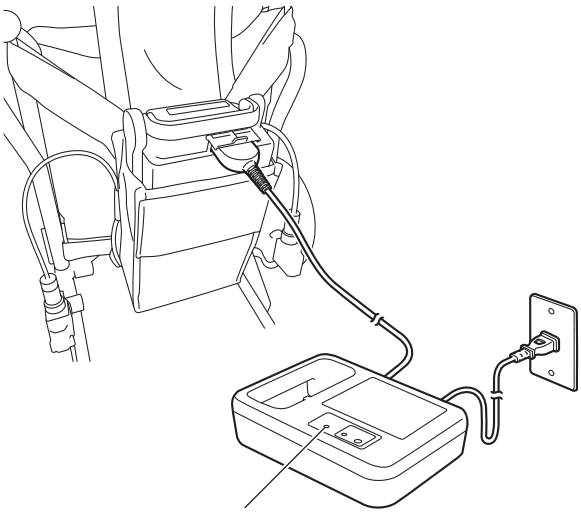

⑥ While charging, you can check the charge status using the capacity indicator lamps on the battery.
The capacity indicator lamps will turn off after charging has completed.
Assuming that charging started with the battery in an empty state, the time to completion is typically 4.5 hours.

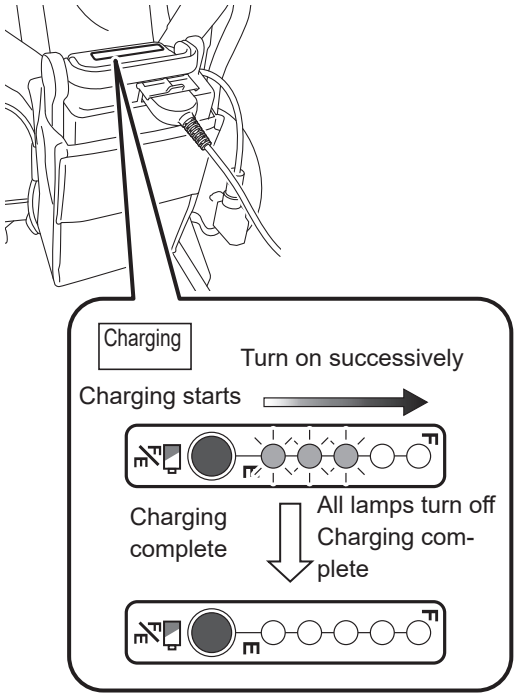

⑦ After charging has completed, unplug the charger plug and the power plug, then securely close the battery’s connector cover.

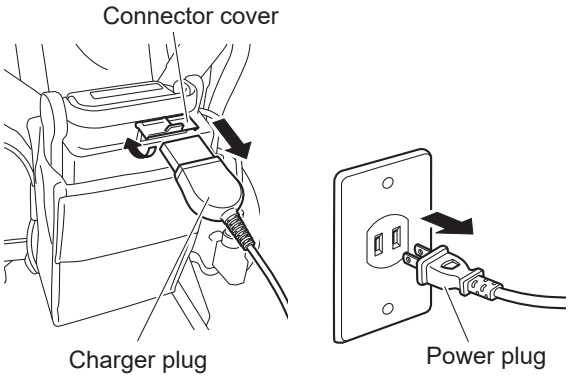

NOTICE

- **Do not pull on the power cord. This can cause the wires to break.**

8.5. The Temperature of the Lithium Ion Battery (ESB1) during Charging

Charge the battery in an environment with a temperature of 10 to 25°C (50 to 77°F).

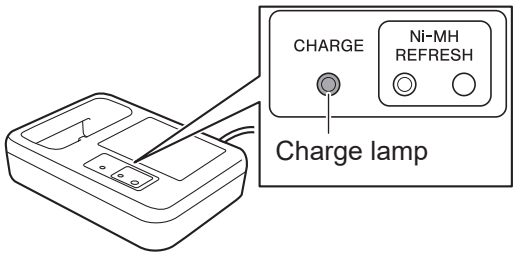

- To protect the battery, if the internal temperature of the battery is under 0°C (32°F) or over 40°C (104°F), charging does not start. Instead, it enters a standby mode. During this time, the charge lamp (green) flashes.
  While in standby mode, when the battery reaches an appropriate temperature, the charge lamp (green) will change from a flashing to an “on” state, and charging will start automatically. (The length of the standby time varies with the conditions.)
- The battery temperature increases during charging. However, if the battery temperature rises above 45°C (113°F), the power for the charger will turn off to protect the battery.
  Since charging has not ended, it is necessary to charge again after the battery temperature has decreased.

  Charging a battery immediately after travel, or charging a new battery is likely to cause its temperature to increase, which increases the likelihood of the charger stopping charging before completion.

8.6. Charger (ESC3) Indicator Lamps

The charger (ESC3) for the lithium ion battery has a charge lamp to indicate the battery and charging conditions according to the lamp's color and whether it is on or flashing.
The lamp indications are explained in the following table.

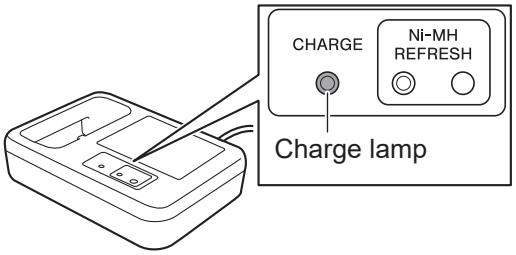

Charger lamp indication	Battery capacity indicator lamps	Description
Lit green 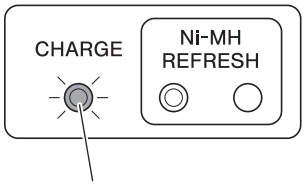 Charge lamp (green)	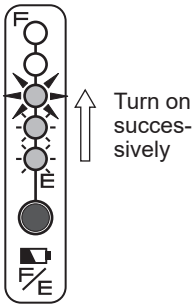 	Indicates normal charging. The charge lamp will turn off after charging has completed.
Flashing green (once per second) 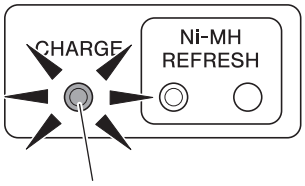 Charge lamp (green)	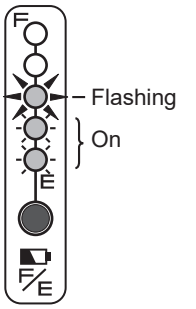 	Indicates charge standby. • When the temperature of the battery is not within the chargeable range 0 to 40°C (32 to 104°F), the charger enters a standby state and the charge lamp starts flashing in green. • Once the battery temperature falls within the chargeable range during standby, charging will start automatically and the charge lamp (green) changes from a flashing to an "on" state. However, if the charge standby condition continues for a long time, charging will end. When this happens, the charge lamp flashes rapidly in green.
Flashing green (5 times per second) 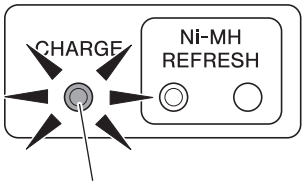 Charge lamp (green)	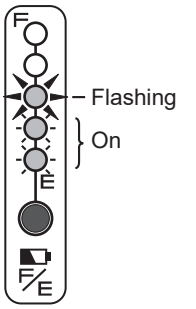 	Indicates timeout of charge standby. • The charger has remained in standby mode for a long time and has stopped charging the battery. Re-locate the charger and try to charge the battery again.
Lit or flashing red 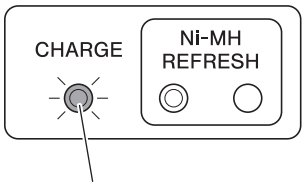 Charge lamp (red)	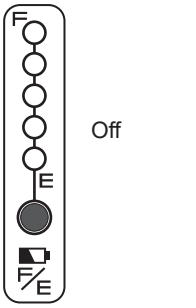 	The charger has detected a problem in the charger or the battery, and is unable to charge. Stop charging by disconnecting the charger plug and the power plug. Check the battery, charger, and cord connection for any problem, and then try charging again. If the charge lamp light comes on or flashes in red again, an equipment failure may have occurred. Stop charging by disconnecting the charger plug and the power plug, and have the equipment inspected by a dealer.

9. Wheelchair Transporting and Storing Instructions

Please refer to the Warnings in “1.5.15. Transporting and Storing the Wheelchair” on page 18.

9.1. Loading the Wheelchair in a Car

(1) Turn off the power of the wheelchair.

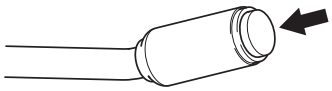

(2) Remove the battery.
Be sure to remove the battery from the wheelchair so that its power will not turn on unexpectedly during transport.
Be sure to put the protective cap on the removed battery.
Refer to “5.2. Removing the Battery” (pages 39 to 40).

(3) Lock the wheels.
Apply the parking brakes.

(4) Remove any detachable parts.
Remove the foot-leg supports and any other parts that can be detached.

(5) Detach the drive units.
If necessary, detach the drive units from wheelchair frame.
Refer to “10.1. Removing and Installing the Unit” (pages 74 to 76).

(6) Fold the wheelchair.
If necessary, fold the wheelchair.

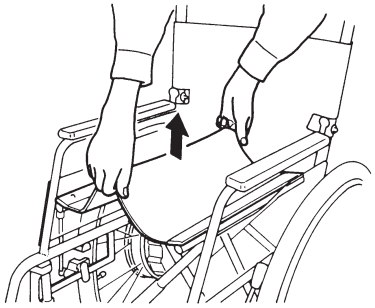

WARNING

- **Be sure to store the disconnected battery with the protective cap on it. Exposed contacts can cause short circuits and lead to a fire or battery rupture.**

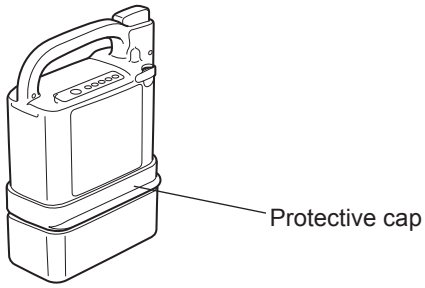

9

(7) Load the wheelchair into the car.
Gently load the wheelchair by holding the frame portion with both hands.
Never drop the wheelchair.

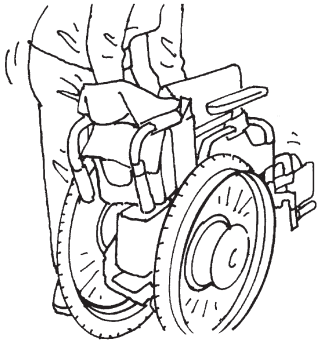

(8) Secure the wheelchair.
Secure the wheelchair to prevent it from moving or hitting any surrounding objects.

TIP **When loading:**

- This product uses precision electronic parts. Do not apply sharp impact.
- Load it upright whenever possible.

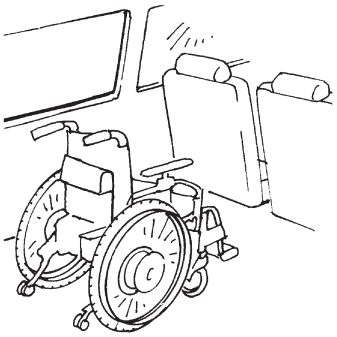

TIP **Securing the Wheelchair**

- Strap it down with a belt, etc., or place a shock absorbing material under and around the wheelchair.

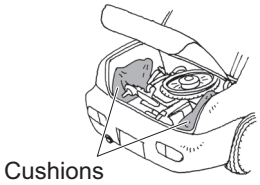

9.2. Unloading the Wheelchair from a Car

(1) Gently unload the wheelchair from the car.
Never drop the wheelchair.

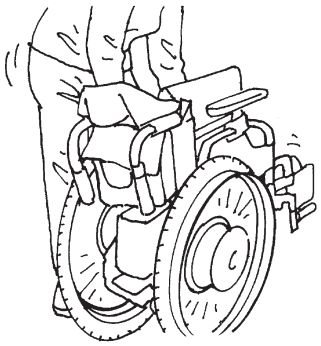

(2) Reattach the removed parts, detached units back to their original places, and unfold the wheelchair.

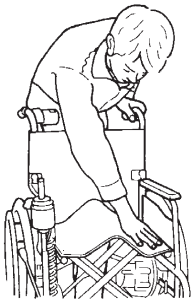

(3) Check that the parking brakes are applied.

(4) Check that the anti-tip device is in the correct position.

TIP **When unloading:**

- This product uses precision electronic parts. Do not apply sharp impact.

WARNING

- **If the foot-leg supports are removed or foldable parts are folded, be sure to place them in their original positions before operating the wheelchair. Never operate the wheelchair with parts removed or folded. You may injure yourself.**
- **If the anti-tip device is folded or retracted, be sure to place it in its original position and confirm that it is locked before operating the wheelchair. Never operate the wheelchair with the anti-tip device folded or retracted. You may injure yourself.**

9.3. Storing the Wheelchair

(1) Apply the parking brakes.

(2) Turn off the power and remove the battery.
Refer to “5.2. Removing the Battery” (pages 39 to 40).

(3) Store the wheelchair normal temperature indoors where there is less humidity.

(4) To wipe off dirt or spots before storing, use a tightly wrung-out towel.

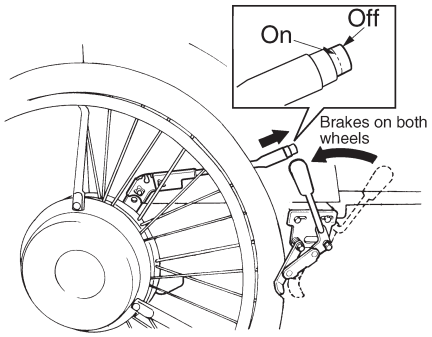

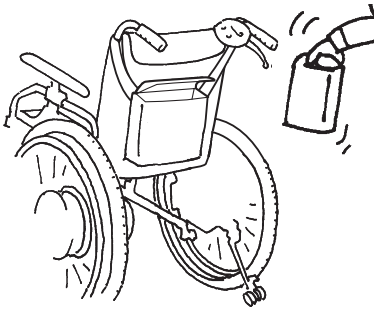

9

WARNING

- **Be sure to remove the battery when not in use, so that its power will not turn on unexpectedly in storage.**
- **Be sure to store the disconnected battery with the protective cap on it. Exposed contacts can cause short circuits and lead to a fire or battery rupture.**

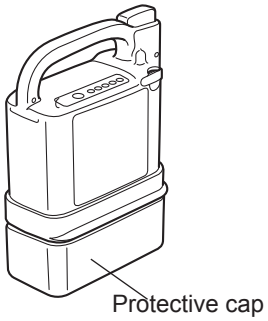

TIP **When storing the battery for a long period of time, see sections below, and observe the cautionary notes.**

- For the nickel metal hydride battery “7.2. (3)Storing the battery”
- For the lithium ion battery “8.2. (3)Storing the battery”

Please refer to the Warnings in “1.5.15. Transporting and Storing the Wheelchair” on page 18.

9.4. Boarding an Airplane

Once your plane trip has been determined, inform your airline company in advance, that you will be using an electric wheelchair, and follow their instructions. At this time, provide the airline company with details of your wheelchair. In particular, see the specifications for the battery you are using, below:

■ Nickel metal hydride battery (shown as “Ni–MH” on the label)

Model	JWB2
Voltage	24 V
Capacity	6.7 Ah
Type	Dry cell with a built-in microcomputer

■ Lithium ion battery (shown as “Li–ion 00” on the label)

Model	ESB1
Voltage	25 V
Capacity	11.8 Ah (295 Wh)
Type	Dry cell with a built-in microcomputer

About the lithium ion battery

There may be restrictions in regard to carrying the lithium ion battery on-board, or checking-in as a baggage. Be sure to consult with the airline company in advance.

10. Wheelchair Disassembly and Adjustments

The JWX-2 has a variety of features to enhance its use and convenience. Use these features according to your purposes. For information on the wheelchair frame to which JWX-2 is attached, see the owner's manual from the frame manufacturer.

10.1. Removing and Installing the Unit

The power units of the JWX-2 can be removed from the frame when replacing the current wheels with manual wheels or when transporting the wheelchair.

(1) Removing the power units from the frame

① Turn off the power and remove the battery. Put the protective cap on the removed battery. Refer to "5.2. Removing the Battery" (pages 39 to 40).

② While turning the coupler ring at cable tip CCW and pull out it upward.

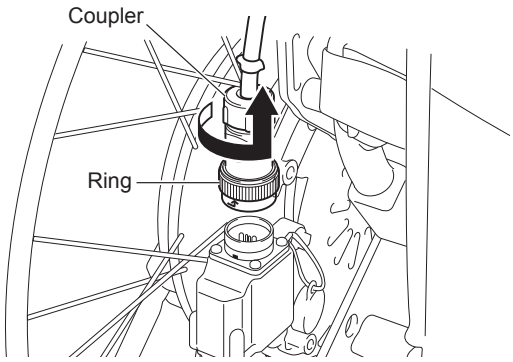

③ Install the cap not to make dirt and water getting into the coupler.

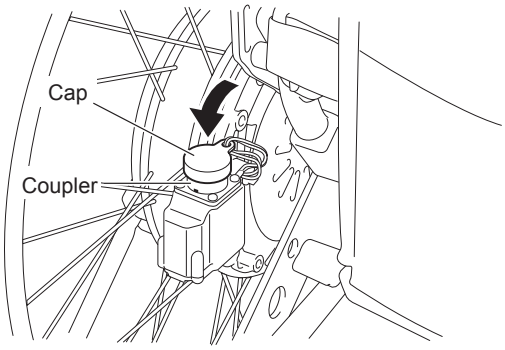

④ Place the wheelchair so that it will not become unstable when the power units are removed.

⑤ Release the parking brakes.

⑥ While holding the hub with hand and pulling the middle of the center ring "a" with your fingers, pull out each power unit using both hands.

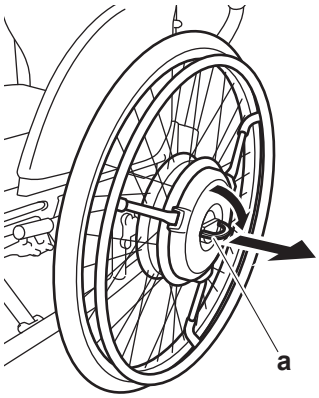

(2) Installing the power units to the frame

① Place the wheelchair so that it will not become unstable.

② While pulling the middle of the center ring “a” with your fingers, install each power unit using both hands so that the torque stopper axle “b” fits into the torque-receiving component.

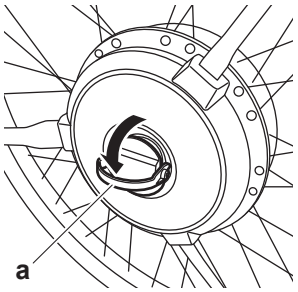

● Sample 1

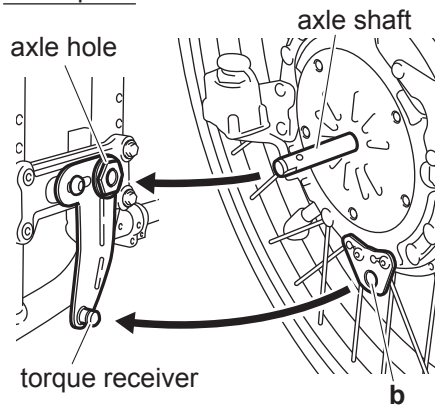

● Sample 2

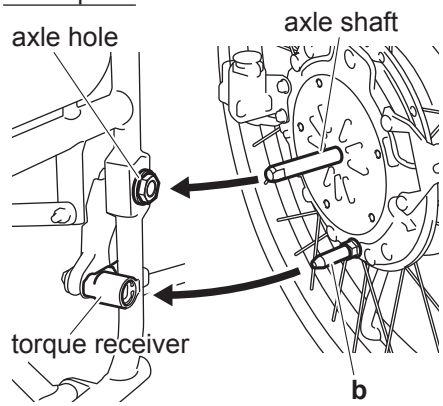

③ Push in each power unit completely. Check to ensure that the two balls “a” on the end of the axle can be seen completely.

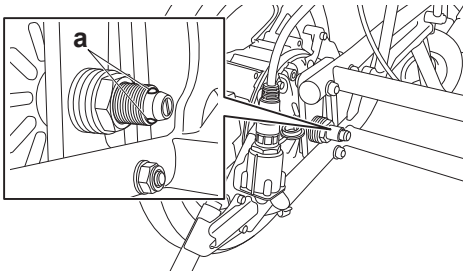

④ Pull each power unit to ensure that it will not come off.

WARNING

- **The wheel may come off if not mounted correctly. Make sure the wheel cannot come off before using the wheelchair.**

⑤ Place the power units in their normal position, and then apply the parking brakes.

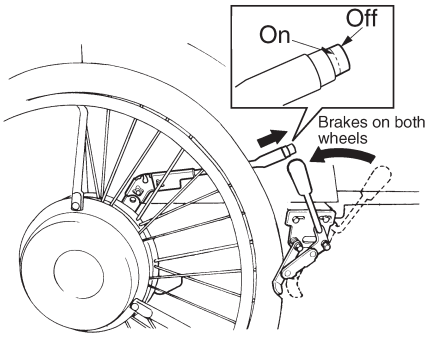

⑥ In the case of quick connector
Align white-colored arrow mark on the cable side coupler with another white mark printed on the wheel side coupler (left or right wheel), insert the coupler until you hear clicking sound.

● In the case of quick connector

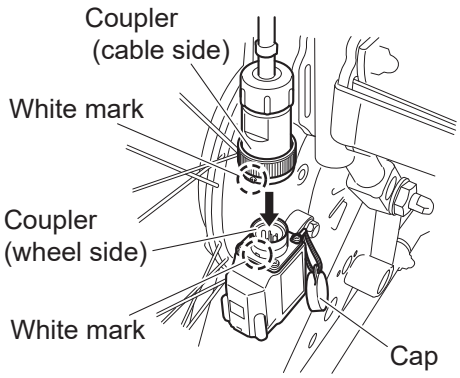

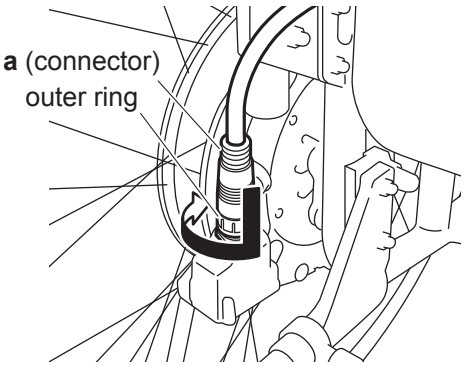

⑦ Install the battery.

WARNING

- **When a person is sitting in the wheelchair, do not remove or install the wheels. The person riding in the wheelchair or people around the wheelchair may be injured.**
- **After the power units are installed to the frame, be sure to check that the balls on the end of each axle can be seen, and that the units will not come off if pulled. If the axles are not secured, the axles could suddenly come off while the wheelchair is traveling and the wheelchair could tip over, causing serious injury.**

10.2. How to Remove Battery Bag of JWX-2 (Battery Separated Type)

(1) Remove the battery. Refer to “5.2. Removing the Battery” for details.

(2) Remove the coupler at cable tip and install a cap. Refer to “10.1. Removing and Installing the Unit” for details.

(3) Remove the hook-and-loop fastener underneath of battery bag.

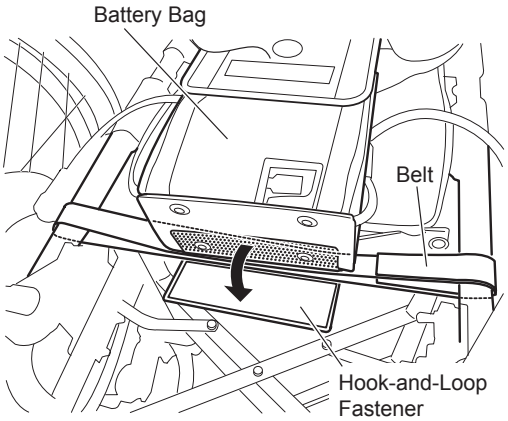

(4) Remove the hook-and-loop fastener of battery bag band part and remove the battery bag.

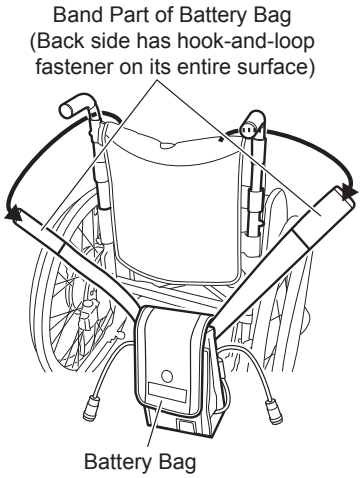

(5) Remove the hook-and-loop fastener of belt and remove the belt.

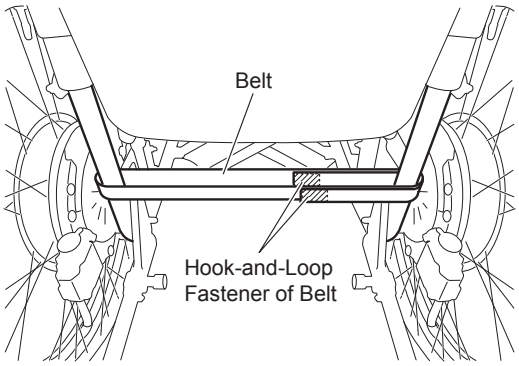

(6) Feed the belt through the frame under back support and attach the hook-and-loop fastener.

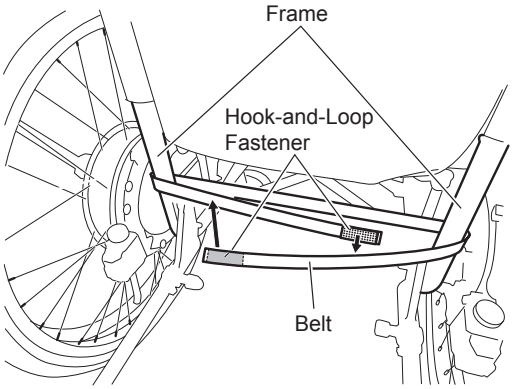

NOTICE

- **Attach the hook-and-loop fastener (male) at both edges of belt to entire surface.**

(7) Slide the belt and adjust the two (2) belt edges to the vicinity of vehicle center as much as possible.

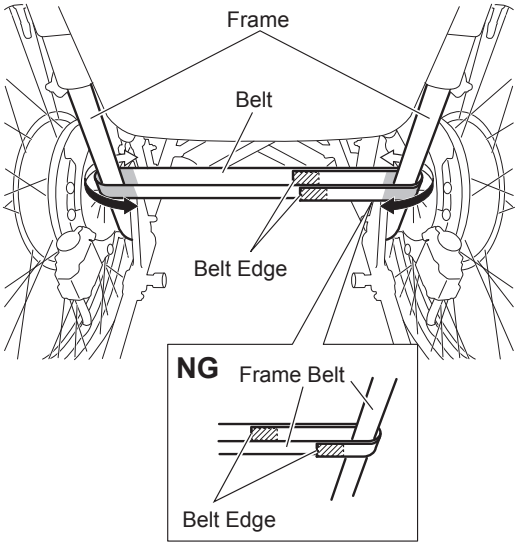

NOTICE

- **The belt edges should not be near the frame or touching moving parts (as shown incorrectly in the "NG" inset drawing).**
- **Make sure the belt is taut. A slack or loose belt could allow the battery bag to come off or the belt could get caught in moving parts.**

(8) Feed the band part of battery bag through upper side frame and fix the belt by using fitting tape (Hook-and-loop fastener of male at both sides).
There are two (2) ways for fitting tape attaching methods as follows; Select the method adequate to the wheelchair you are using and attach the tape.

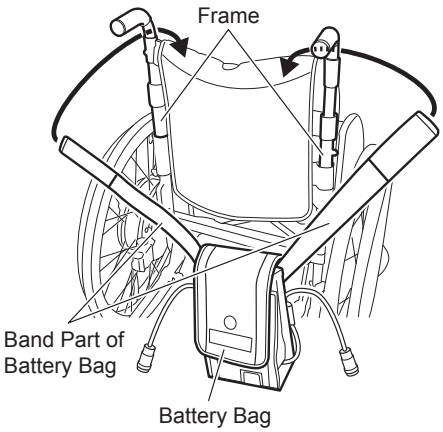

Case of Battery Bag Band Tip Part not Reaching to Battery Bag

(9) Attach the fitting tape aligned to the band part tip of battery bag.

(10) After feeding the band part of battery bag through the frame, attach the fitting tape of band edge part to the band.

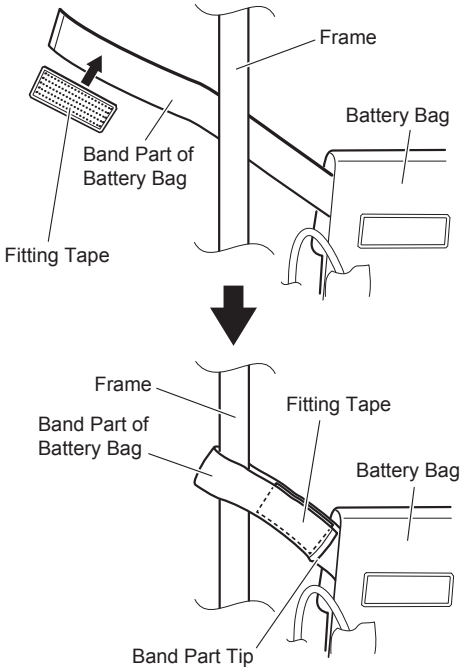

Case of Battery Bag Band Tip Part Reaching to Battery Bag

(11) Attach the fitting tape aligned to the edge part of hook-and-loop fastener (female) at the base of battery bag band part.

(12) After feeding the band part of battery bag through the frame, attach the fitting tape of band edge part to the band.
Remove the hook-and-loop fastener (female) attached to the battery bag once, and attach the surplus band part tip to the hook-and-loop fastener (male) of battery bag.
After attached the band, attach the hook-and-loop fastener (female) to the original position.

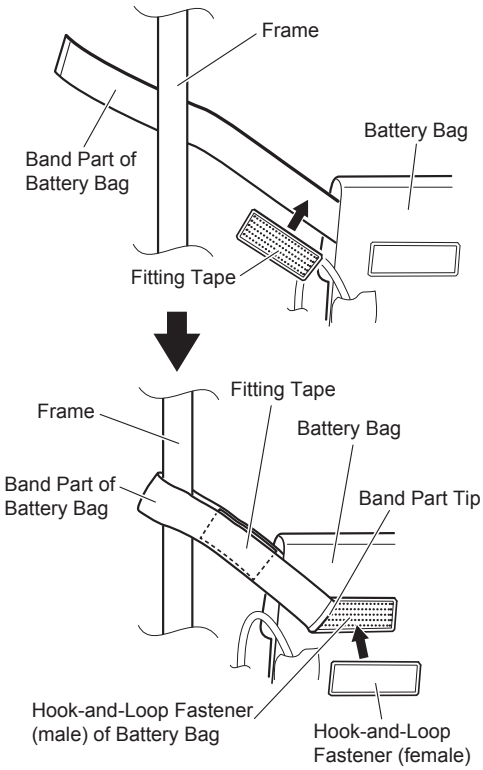

NOTICE

- **Attach entire surface of fitting tape to the band part of battery bag. Otherwise, there may be the risk of battery bag coming off.**
- **Make sure the band part of the battery bag is taut. A slack or loose band could allow the battery bag to come off or the band could get caught in moving parts.**

(13) Remove the hook-and-loop fastener at the bottom surface of battery bag and feed both two (2) belts through.

(14) Attach the hook-and-loop fastener and fix the battery bag.

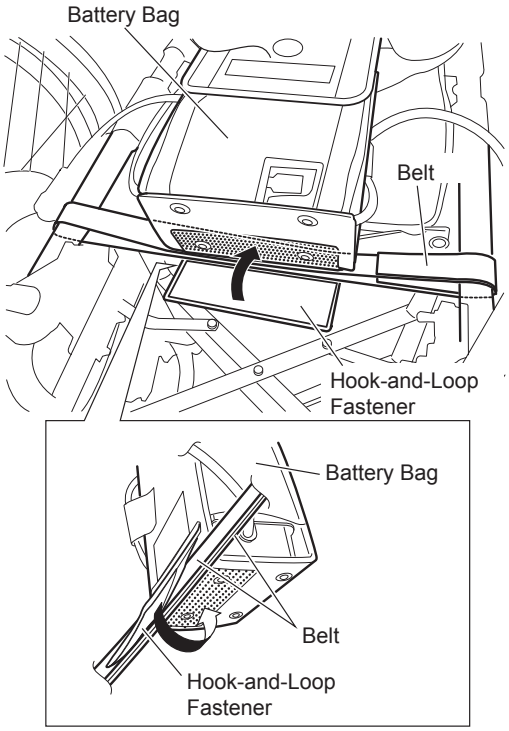

10

10.3. Anti-tip device

The anti-tip device of the JWX-2 can be turned upwards. Do so when going over bumps with the assistant operations. Immediately after going over a bump, return the anti-tip device to its original position.

(1) Turning upwards the anti-tip device
Pull the lock knob and turn the anti-tip device inward while the lock lever is pushed.

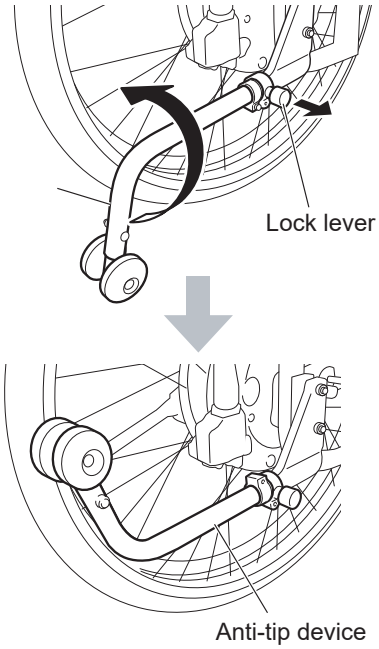

(2) Returning the turned anti-tip device to its original position

Pull the lock knob and turn the anti-tip device downward without touching the lock lever until you hear a click.

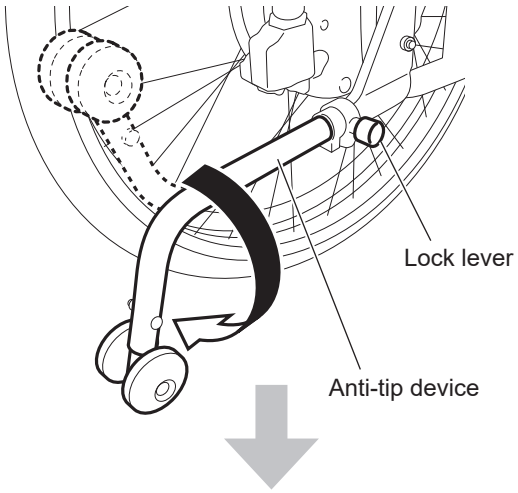

Move the anti-tip device back and forth and side to side to ensure that it is locked in position.

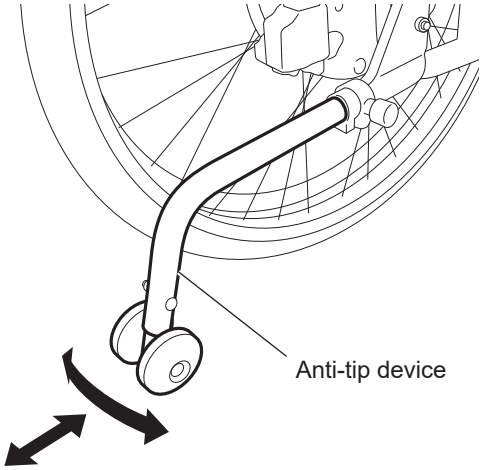

Check that the safety wheels on the ends of the anti-tip devices are 35-50 mm (1.4-2.0 inches) above the ground when the casters and rear wheels are in contact with the ground.

If the distance between the safety wheels and the ground is not within this range, contact your dealership.

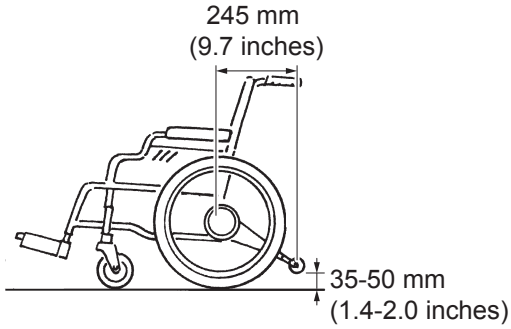

Check that the distance between the center of the wheelchair back pipe (where the axles of the rear wheels are installed) and the center of the safety wheels on the ends of the anti-tip devices is 245 mm (9.7 inches) or more. If the distance is less than 245 mm (9.7 inches), contact your dealership.

WARNING

- **Operating the wheelchair when the anti-tip device is removed or not in the correct position may cause a rollover. Make sure you operate the wheelchair with the safety wheels facing downwards.**
- **Only have the safety wheels facing upwards when going over bumps with the assistant operations and other such situations.**
- **Make sure you return the safety wheels to the correct position after going over the bump.**
- **A road surface with large depressions can cause a rollover, even if the safety wheels are facing downwards. When going over bumps, also pay close attention to the condition of the road surface.**
- **Even if the anti-tip device is in the correct position, the wheelchair could rollover due to various factors, such as a bumpy road surface, holes, level differences, and slopes. Carefully choose routes you use frequently to be sure they are not hazardous.**

10.4. Smart Tune Settings

The Function parameters and Drive parameters of JWX-2 can be changed to fit the usage. These changes are performed by Smart Tune software. Consult with your dealer on changing the settings.

(1) Function Parameters

① Auto power off function

Selection of the turn off the power after a specified time of non- operation.
5 minutes (default), 10 minutes, 60 minutes or invalidate the auto-turn-off.

② Buzzer sound

This function changes the buzzer sound on (default) and off. It is impossible to disable the alert sounds.

③ Switch brightness

This function changes the switch light brightness.
'Bright'(default), 'Starts bright and turns off', 'Starts bright and turns dark' or 'Starts bright and turns slightly dark'

④ Mode switch setting

Selection to use or not use the Mode switch

(2) Driving Parameters
The Driving Parameters such as assist power ratio, left/right balance, etc. can be adjusted.

① Assist motor power

Selection of 0 – 100% of the hand input power.

② Assist speed limit

Selection of 2 – 6 km/h of the assist top speed.

③ Left/right balance

Input/action sensibility selection. 0.6 – 2.6 left/right each

④ Straight/turn characteristics

Selection of 9 steps of turning characteristics.

⑤ Coasting distance

Selection of 9 steps, 0.1 – 2.0 times of the standard coasting distance.

⑥ Side slope assist

Selection of 7 steps of the side slope crossing assist level.

WARNING

- **When evaluating the need to change parameter settings, and choosing the actual changes, consult the guidance of experts such as physical therapists and occupational therapists at the dealer.**

11. Maintenance, Daily Check, Periodic Inspection

It is recommended that the JWX-2 be inspected periodically at the dealer (the dealer will charge a fee for this inspection).
To ensure long-term durability, we recommend that your perform regular inspections every 6 months after initial use.

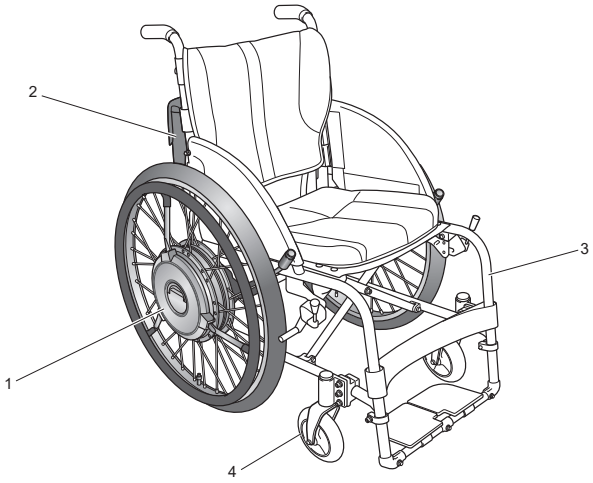

Sample Inspection Form

Inspection Item		Date of Inspection	Inspection Area	Checked	Corrective Measure
1	Unit		Noise, jammed object		
			Tire air pressure (450 kPa, 4.5 kg/cm^2), wear, cracks, loose valve, cap		
			Handrim looseness, damage, harmful damage, burrs, sharp points, and so on		
			Spoke looseness, breakage		
			Torque stopper tightening		
			Dust cover installation		
			Anti-tip device looseness, deformation, damage		
			Dirty terminals on battery seat		
			Wire connection looseness, damage		
2	Battery and charger		Loose bolts, damage, use condition, charging frequency, refresh status		
3	Frame (example) or (reference)		Deformation, damage, bolt looseness, harmful damage, burrs, sharp points, and so on		
			Folding function		
			Creaking sound		
			Footrest looseness		
			Parking brake effectiveness, wear		
4	Casters (example) or (reference)		Air pressure (for pneumatic tires)		
			Wear, cracks		
			Looseness, wobbles, noise		
			Twisted valve stem, cap (for pneumatic tires)		
5	Status of Battery Bag		No fray/ break/ damage on the bag		
			No biting of fray/ break/ damage/ foreign matters on the belt and hook-and-loop fastener at the cable retaining parts of bag.		
			No laxation/ slackness in upper/ lower belts		
			No biting by folding		
			No spool up or touching to the moving part		

WARNING

- **Continuing to use the wheelchair with a problem in the wheelchair body or the wheels may cause damage to the wheelchair while traveling, and may result in a rollover or fall.**

11.1. Maintenance

[Cleanup]

If the JWX-2 becomes dirty due to normal use, use a tightly wrung-out towel to wipe off any dirt. If the dirt is excessive, use a towel and neutral detergent to remove the dirt. After removing the dirt, be sure to wipe off any remaining detergent.

NOTICE

- **Do not wash by directly hosing it down with water. Also, do not wash using steam. The electronic devices can get damaged, which may lead to malfunction.**
- **Do not clean with solvent such as gasoline or paint thinner. This may damage the painting and plastic parts.**

When disinfecting the wheelchair, remove the JWX-2 from the frame, and then disinfect only the frame. Have the dealer remove the JWX-2 from the frame. To disinfect the JWX-2, do not heat, pressurize, depressurize, supply electricity, irradiate with electromagnetic waves, immerse in a liquid, or apply a liquid cleaner or spray. Instead, wipe the JWX-2 using a towel and alcohol.

[Easy repairs]

When a repair work is needed, contact your dealership even if the concern was minor.

[Normal repairs]

If the parts are damaged or lost, immediately contact the dealer. Have the dealer replace the parts or repair the wheelchair.

For normal maintenance, repairs, or service, be sure to contact the dealer. The user should not repair or service the wheelchair, or remove, pack, and send the parts to request repairs. If the wheelchair is not repaired or assembled completely, the user or those around the user could be injured.

To perform repairs and service, the dealer uses the service manual, parts catalog, and other documentation. These items are not sold to the general public.

When requesting repairs, do not send the wheelchair directly. First, contact the dealer.

[Service life & Replacement parts]

The estimated service life is 6 years.

However, the service life depends on the usage condition, environment and frequency.

The service life means the period in which the product performance shall be maintained with performing the maintenance and inspection by the dealer.

Parts that are necessary for repairs will be available for 8 years after the production has ended.

11.2. Daily Checks

Perform the following checks each day before operating the wheelchair. For details, refer to “3.1. Inspecting the Wheelchair”.

①	Exterior	Visually check the components and ensure that they are not damaged.
②	Anti-tip device	Make that the anti-tip device is in the correct position and locked in place.
③	Rear tires	Make sure that there is tire depth, there are no cracks, and there is sufficient air pressure. If the pressure is not enough, pump up to 450 kPa.
④	Parking brakes	Make sure that the parking brakes can stop the wheels from moving, and that they are installed securely to the frame.
⑤	Wheels	Make sure that the wheels are not deformed and the spokes are not broken.
⑥	Casters	Make sure that there is tire depth, and there are no cracks. Make sure that the caster forks are not damaged. Make that the nuts securing the tires are not loose.
⑦	Battery	Check the residual capacity.

If any problems are found, have the dealer repair the wheelchair.

11.3. End of JWX-2 Use Recycling

When the JWX-2 is at the end of its service life and must be disposed, contact your local government office first for recycling and follow their instructions. Or contact your dealer to recycle your used JWX-2 and its batteries.

12. Dimensions and Specifications

12.1. Dimensions

609 mm (24 inches) model dimensions. In parentheses are 558 mm (22 inches) model dimensions.

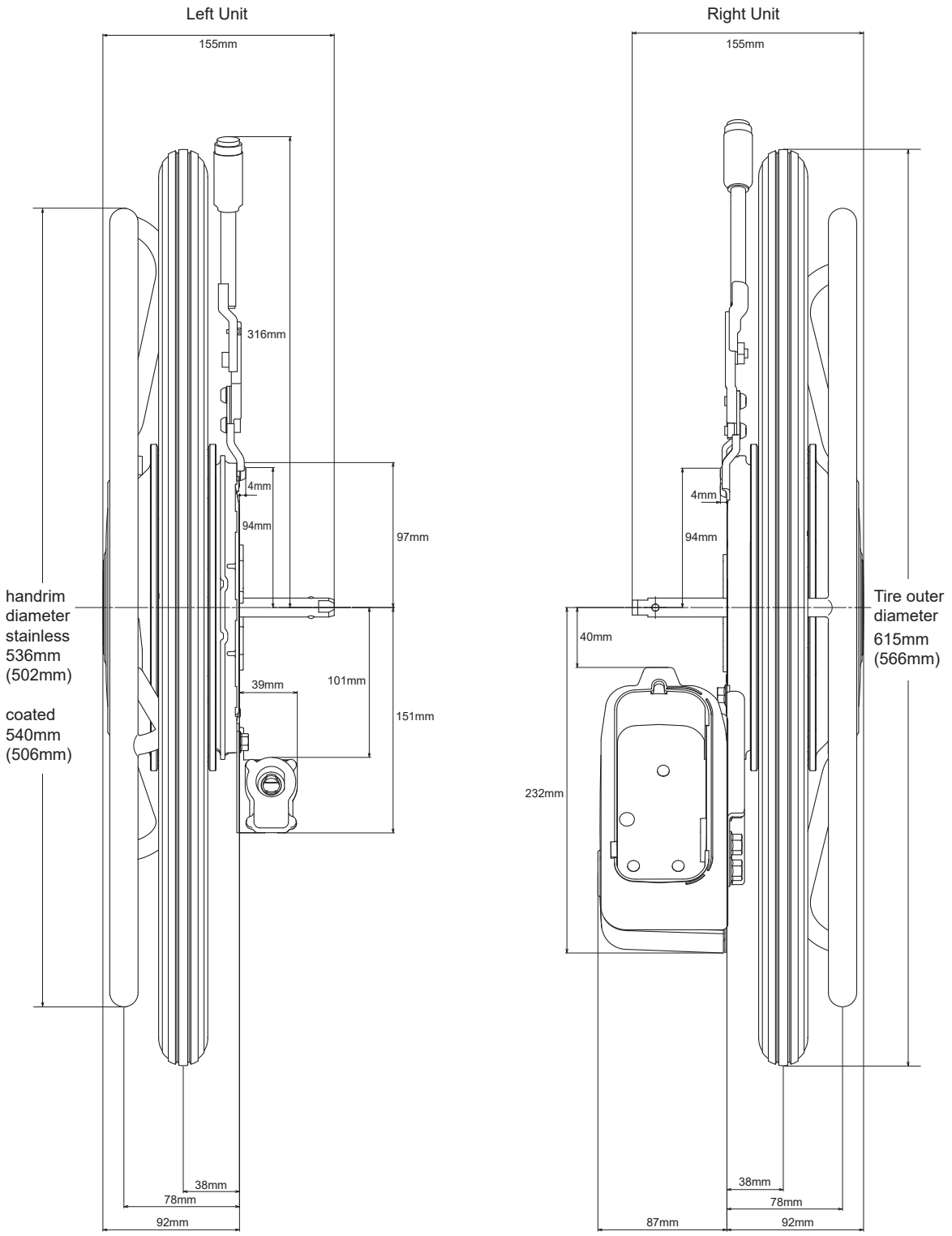

12.2. Specifications

Model				JWX-2 power assist unit for wheelchairs	
Weight	Total Weight	with battery	Ni-MH battery	17.5 kg (38.6 lb)	
			Li-ion battery	18.5 kg (40.8 lb)	
		without battery		14.5 kg (32.0 lb)	
	Part Weight		Right unit	6.7 kg (14.8 lb)	
			Li-ion battery	6.7 kg (14.8 lb)	
			Battery bag	1.1 kg (2.4 lb)	
			Ni-MH battery	3.0 kg (6.6 lb)	
			Li-ion battery	4.0 kg (8.8 lb)	
Tire size				558 mm (22 inches)	609 mm (24 inches)
Rear Tire		Tire specifications		37-540 (24x1 3/8)	
		Recommended air pressure		450 kPa (65 PSI)	
Drive motor				AC servomotor 24V 110W x 2 (30minutes rated output)	
Drive system				Rear wheel direct drive	
Brake system				Motor generative brake	
Steering system				Handrim operation	
Control system				Microprocessor control	
Minimum Reversing Space width				Varies depending on the wheelchair the unit is installed on. Pivoting on a spot is possible. *1	
Maximum safe slope angle				6 degree	
Maximum width of ditches that can be gone over				Varies depending on the wheelchair the unit is installed on and the caster size.	
Operating conditions		environment		Inside and outside	
		temperature		0°C to 35°C	
		humidity		No condensation	
IEC waterproof standard				IPX4 (resistance against splashing water)	
Load capacity (including the rider, luggage, and frame weight)				130 kg (286 lb) *2	
Travel range	Continuous travel range (in accordance with Yamaha spec)	with Ni-MH battery (JWB2)		18 km (11.3 mi) *3	
		with Li-ion battery (ESB1)		30 km (18.1 mi) *3	

*1 Minimum Reversing Space is the space required to pivot on a spot and is determined by the wheelchair frame.

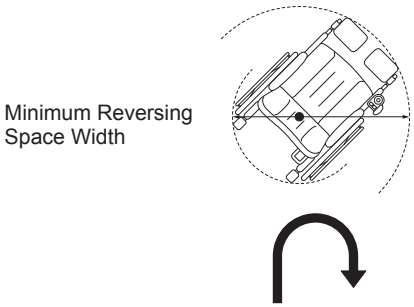

*2 The value is the load capacity for the JWX-2. When the wheelchair is completely assembled, the total weight of the rider and luggage must not exceed the load capacity of the wheelchair frame.
If the wheelchair is operated continuously with a load that exceeds this value, the product could malfunction or be damaged, or its life could be shortened.

*3 The travel range varies depending on the conditions of the road surface (travel over curbs, on slopes, and so on) and may be shorter than this value.

Battery and Charger			Nickel-Metal Hydride	Lithium-ion
Battery	Model		JWB2	ESB1
	Type		Rechargeable Dry Battery with built in microprocessor	
	Nominal output voltage		24 V	25 V
	Rated output (5-hour rate)		6.7 Ah (160.8 Wh)	11.8 Ah (295 Wh)
Battery Charger	Model		ESC3	
	Charging method		Automatic Charging controlled by the microprocessor	
	Rated output during charging		29 V · 2.6 A	29.2 V · 3 A
	Chargeable battery		JWB2 *4	ESB1 *4
	Charging time	Time for normal charging	Approx. 3 hr	Approx. 4.5 hr
		Time for refresh charging	3–19 hr	—

*4 The Ni-MH battery and Li-ion battery each have a dedicated charger. The dedicated chargers are not interchangeable.

13. Troubleshooting, Repairs, Warranty

If you have flat tires, contact your dealer. The tire structure of JWX-2 is same to the bicycle tires. Generally bicycle shops can repair the flat tires.

13.1. Before Requesting Repairs

Check the troubleshooting table below.

When Operating the Wheelchair

Problem	Warning lamp	Buzzer	Check Point	What To Do
The wheelchair does not start moving, or stops while traveling.		Beeps (Pi —)	Has the battery run down?	Charge the battery.
			Do you use a lithium ion battery, and are you operating the wheelchair in an external air temperature below freezing point, or in the scorching heat of summer? Additionally, was the wheelchair stored in a place where the external air temperature dropped below freezing point, or where the temperature become hot, such as inside a car?	Use or store the wheelchair in an environment with appropriate external air temperature.
	Blinking 5 times	Beeps (Pi —)	Has the motor overheated as a result of abusive riding?	Turn off the power. Wait a while before resuming the ride.
	Blinking 3 times	Beeps (Pi —)	Make sure the wheels are not rotating.	Turn off the power. Turn on the power again.
			Has the power been turned off automatically by the auto power off mode?	Turn off the power, and then turn it back on.
			Is the battery properly inserted?	Insert the battery properly.
Unable to operate			Are the brakes engaged on the wheelchair?	Release the brakes.
Shortage of power			Has the battery deteriorated?	Replace with a new battery. For a nickel metal hydride battery, try refresh charging.
	Blinking	Beeps (Pi —) continuously	Is there a large load being applied while on a steep slope?	It will stop beeping once the load is reduced.
	Blinking	Beeps (Pi —) continuously	Is there a large load being applied, causing the motor to overheat?	Lighten the load so that the motor will not overheat.
			Is the ambient temperature low?	Use the wheelchair in an environment with appropriate outside temperature.
Short travel range, Insufficient speed			Is the battery fully charged?	Replace with a new battery. For a nickel metal hydride batter, perform refresh charging.
			Is the ambient temperature low?	Use the wheelchair in an environment with appropriate outside temperature.
			Is the wheelchair carrying heavy loads or driving uphill?	Heavy loads tend to shorten the travel range.
			Is the assist power parameter set to a low setting?	Contact the dealer to adjust the setting.
Sluggish manual travel			Is the air pressure of the tires too low?	Inflate the tires.
			Are the brakes engaged on the wheelchair?	Release the brakes.
Abnormal vibration or noise			Is the area where the axle is mounted loose?	Tighten it or contact the dealer.
			Is there noise coming from the drive unit?	Contact the dealer.
			Is the wheelchair frame or front casters wobbling?	Contact the dealer.

When Charging (Ni-MH Nickel Metal Hydride Battery)

Problem	Charger LED Indication	Battery LED Indication	Check Point	What to Do
Will not charge	Off	Off	Is the power cord connected?	Connect the power cord to a power source.
	Off	Off	Will another battery accept a charge?	If it can be charged, the charger is normal. Use a rechargeable battery. If it cannot be charged, the charger may be faulty. Contact your dealer.
	Flashing green (5times per second)	Off		The charger has remained in standby mode for a long time and has stopped charging the battery. Wait for the battery temparature to drop and try to charge the battery again.
	Flashing red (5times per second)	Off	Are a Ni-MH battery and a Li-ion battery connected at the same time?	If both are connected at the same time, disconnect one of them.
			Can another battery be charged?	If it can be charged, the charger is normal. Use a rechargeable battery. If it cannot be charged, the charger may be faulty. Contact your dealer.
	Flashing red (once per second)	Off		Unplug the power plug, stop charging the battery and contact your dealer.
	Lit red	Off		Unplug the power plug, stop charging the battery and contact your dealer.
Prolonged charge standby	Flashing green (once per second)	Residual capacity indicator lamps are lit	Is the battery temperature appropriate?	The charger is in standby mode. This does not indicate a malfunction. Wait until the battery reaches an appropriate temperature.
		Residual capacity indicator lamps are lit	Is the ambient temperature appropriate?	Charge the battery in an environment with an appropriate temperature.
Stops charging halfway	Off	Residual capacity indicator lamps are lighted only halfway	Is the temperature of the battery high?	After the battery has cooled down, try charging again.
Takes too long to charge	Lit orange	Residual capacity indicator lamps are lit, and then turned off successively	Are you refresh charging the battery?	The battery is being discharged. Refresh charging will take 3 to 19 hours.
After charging is completed, all of the lamps are not lit	Off	Residual capacity indicator lamps are lighted only halfway	Check the number of times or days you have used the battery.	Has the battery deteriorated? After approximately 300 charge/discharge cycles, the battery capacity will decrease to approximately 60% of that of a new battery.
The charger emits a sound	Lamp display varies with the conditions.	Residual capacity indicator lamps are lit	Is the sound unusual?	Unplug the power plug, stop charging the battery and contact your dealer.
The charger gets unusually hot	Lamp display varies with the conditions	Residual capacity indicator lamps are lit	While the charger is charging the battery, it is normal for the unit to heat up to some degree (about 104–140 °F, about 40–60 °C). If the charger gets too hot, though, it may be malfunctioning.	Unplug the power plug, stop charging the battery and contact your dealer.
The charger emits an odor	Lamp display varies with the conditions	Residual capacity indicator lamps are lit	Does this occur immediately after you start using the charger?	The charger may emit an odor immediately after it is put to use, but the odor will disappear eventually. If the odor persists, unplug the power plug, stop charging the battery and contact your dealer.

When Charging (Li-ion 00 Lithium ion battery)

Problem	Charger LED Indication	Battery LED Indication	Check Point	What to Do
Will not charge	Off	Off	Is the power cord connected?	Connect the power cord to a power source.
	Off	Off	Will another battery accept a charge?	If it can be charged, the charger is normal. Use a rechargeable battery. If it cannot be charged, the charger may be faulty. Contact your dealer.
	Flashing green (5times per second)	Off		The charger has remained in standby mode for a long time and has stopped charging the battery. Wait for the battery temparature to drop and try to charge the battery again.
	Flashing red (5times per second)	Off	Are a Ni-MH battery and a Li-ion battery connected at the same time?	If both are connected at the same time, disconnect one of them.
			Can another battery be charged?	If it can be charged, the charger is normal. Use a rechargeable battery. If it cannot be charged, the charger may be faulty. Contact your dealer.
	Flashing red (once per second)	Off		Unplug the power plug, stop charging the battery and contact your dealer.
	Lit red	Off		Unplug the power plug, stop charging the battery and contact your dealer.
Prolonged charge standby	Flashing green (once per second)	Residual capacity indicator lamps are lit	Is the battery temperature appropriate?	The charger is in standby mode. This does not indicate a malfunction. Wait until the battery reaches an appropriate temperature.
	Flashing green (once per second)	Residual capacity indicator lamps are lit	Is the ambient temperature appropriate?	Charge the battery in an environment with an appropriate temperature (cool in the summer and warm in the winter).
Stops charging halfway	Off	Residual capacity indicator lamps are lighted only halfway	Is the temperature of the battery high?	After the battery has cooled down, try charging again.
After charging is completed, all of the lamps are not lit	Off	Residual capacity indicator lamps are lighted only halfway	Check the number of times or days you have used the battery.	Has the battery deteriorated? After approximately 300 charge/discharge cycles, the battery capacity will decrease to approximately 60% of that of a new battery.
The charger emits a sound	Lamp display varies with the conditions.	Residual capacity indicator lamps are lit	Is the sound unusual?	Unplug the power plug, stop charging the battery and contact your dealer.
The charger gets unusually hot	Lamp display varies with the conditions	Residual capacity indicator lamps are lit	While the charger is charging the battery, it is normal for the unit to heat up to some degree (about 104–140 °F, about 40–60 °C). If the charger gets too hot, though, it may be malfunctioning.	Unplug the power plug, stop charging the battery and contact your dealer.
The charger emits an odor	Lamp display varies with the conditions	Residual capacity indicator lamps are lit	Does this occur immediately after you start using the charger?	The charger may emit an odor immediately after it is put to use, but the odor will disappear eventually. If the odor persists, unplug the power plug, stop charging the battery and contact your dealer.

13.2. Requesting Repairs and Inspections

For your inspection, repair, and service needs, contact the dealer from which you purchased JWX-2. When contacting the dealer, your product serial number may be required. Refer to below to check the serial number, and provide it to the dealer.

Sales dealer:

13.3. Serial Number Location

The serial number is shown on the bottom of the battery seat.

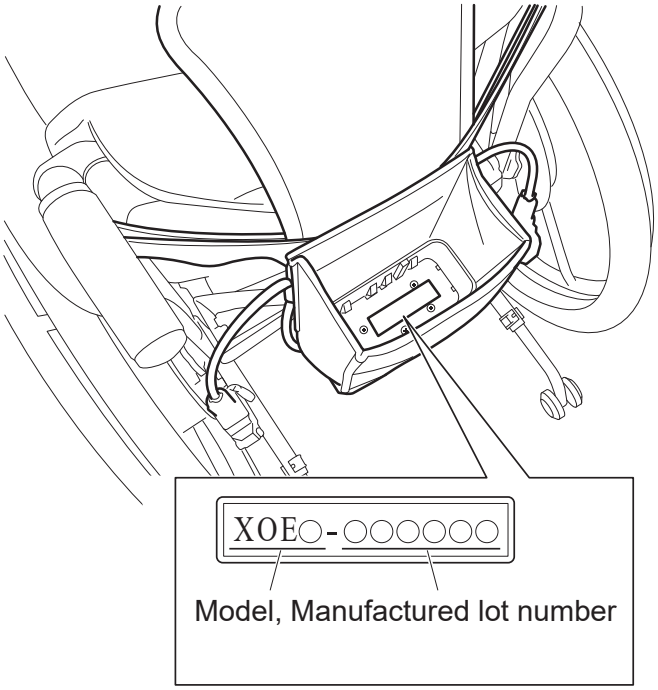

13

14. Australian Warranty

14.1. Warranty

The warranty period for the iXpress is 1 year from the date of purchase.
During this warranty period, if there is a material or manufacturing defect in the iXpress that you have purchased, the defective parts will be replaced or repaired free of charge. The warranty covers the power unit, controller, assistant controller, and charger. Consumable parts, such as the battery, tires, and tubes, are excluded from this warranty.
This warranty does not cover malfunctions due to either the user's intentional misuse or negligent use, such as malfunctions that are caused by use other than that specified in this owner's manual. This warranty also does not cover malfunctions due to modification of the unit or continuous use under conditions other than the specified conditions, such as exceeding the maximum weight etc., regardless of the cause of the malfunction.
Scratches, dullness, and dirt on the surface of the product through normal use are not included in the warranty.
If warranty repairs are necessary, contact the dealer where you purchased the unit.

Additional warranty information for Australia only.

1. For goods distributed by Sunrise Medical Pty Ltd in Australia, our goods come with a guarantee by Sunrise Medical (on behalf of the manufacturer) that cannot be excluded under Australian Consumer Law.

2. You are entitled to a replacement or refund for a major failure and for compensation for any other reasonably foreseeable loss or damage.

3. You are also entitled to have the goods repaired or replaced if the goods fail to be of acceptable quality and the failure does not amount to a major failure.

4. The benefi ts to you given by this warranty are in addition to your other rights and remedies under a law in relation to the goods to which the warranty relates.

YAMAHA

QUICKIE®

SUNRISE MEDICAL

© 2020 Sunrise Medical. Quickie iXpress OM AU Rev D
Part# ST103

Sunrise Medical Australia Pty Ltd
11 Daniel Street Wetherill Park
Phone: (02) 9678 6600
Email: enquiries@sunrisemedical.com.au
www.sunrisemedical.com.au